ASSEMBLY INSTRUCTIONS

JASMIN GREENHOUSE

JAS206 / JAS306 / JAS406 / JAS506

Table of contents

General information:

Preface 3
Safety instructions 4
Notes on assembly 5
Cleaning and maintenance 6
Technical specifications 6
Guarantee declaration 7

Notes on foundation construction:

The foundation for your greenhouse 8
Types of foundations 8
Dimensions for concrete or masonry foundation 9
Scope of delivery and installation of the optional aluminium foundation 10

Assembling your greenhouse:

Scope of delivery 12
Preparations 16
1. Assembling the front wall 18
2. Assembling the back wall 28
3. Connecting the longitudinal parts (floor profile, gutter, ridge) 38
4. Attaching the plastic connectors (floor profile, gutter, ridge) 43
5. Assembling of the longitudinal parts (floor profile, rain gutter, ridge) 45
Assembling the coupling profiles 49
7. Assembling the side wall and roof brace 53
8. Assembling the wind bracing on the side walls and roof 56
9. Glazing the greenhouse 59
10. Installing the roof window 66
11. Assembling the door leaf 71
12. Final assembly steps 78

Explanation of symbols in the assembly instructions:

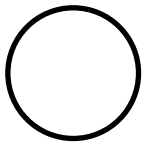

This component

Component is moved

Note

Attention

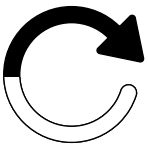

Repeat

Preface

Dear Customer, you own a carefully designed greenhouse made by people for whom precision has become a tradition. Its compact design allows for rapid assembly. The possible applications are very versatile. We reserve the right to make further developments in the interests of technical progress. We ask for your understanding that this may result in slight deviations from the illustrations and descriptions. We wish you every success with your new garden jewel.

Please note!
Identify all components before assembly and check the quantities and dimensions. **Before assembling the greenhouse, check the individual parts list to ensure that no parts are damaged or missing.** We shall not be liable for any additional expenses or downtimes incurred by any installation companies commissioned as a result of an inspection not carried out in advance!
If you need spare parts, please contact us by e-mail. Please let us know the article number of the required part. We will endeavor to provide assistance as quickly as possible.

With twin-wall sheets, it should be noted that there is an inner and outer side. The side that is either labeled or has a sticker at the edge marked "outside" is coated with a UV protection layer. To avoid confusion, always remove the foil only after inserting the respective sheet.

The foundation can be made of concrete or brick. Your greenhouse must be stable and properly secured (see sketches on pages 8/9), therefore it is strongly recommended that the greenhouse is placed on a foundation.

Your safety is important to us!
Assembly should be carried out by 2 people. We recommend wearing protective gloves, safety goggles and safety shoes when installing the frame and glazing (risk of injury and breakage!). Once the assembly is complete, all screw connections should be retightened using an open-jaw or socket wrench. **Please observe our safety instructions on the following pages**!

Important note!
The manufacturer is not liable for storm, wind, water and snow load damage (we recommend removing snow loads from the roof during the winter months). A guarantee for compensation for consequential and financial losses is not provided. If components are visibly damaged, they must be replaced with original spare parts.

It is essential to read the assembly instructions before assembling. This saves you time, avoids unnecessary mistakes and you have already gained important knowledge for the installation.

Our request to you!
In your own interest, we kindly ask you to inform us of all required spare parts at once so that they can be sent in one package.
If necessary, please check your greenhouse until it is finished and send us an email stating the required quantity, item number and article description. This ensures that you receive all the parts you need for assembly and that assembly can be carried out quickly and smoothly.
To prevent parts from being mixed up, we ask for your understanding that we can only process requests for spare parts in writing.

Direct contact

Please always send your spare parts requirements or any complaints to the following e-mail address: **service@gfp-international.com**

Complaint claims for twin-wall sheet
Sometimes, when stapling the twin-wall sheet box, individual sheets may be slightly damaged at the side ends by the stapler.
Please note that twin-wall sheets do not normally have closed side edges and that this feature is unique to us. **Therefore, minor damage (all damage that is no longer visible either after insertion into aluminum profiles or after the plastic clips have been applied - i.e. that does not protrude more than approx. 7 mm into the sheet) is not a reason for complaint**as neither the function nor the appearance are impaired. An exchange of such sheets is only possible after returning the original plates!

We are convinced that this greenhouse will not only bring you joy but also open up a plethora of possibilities for gardening. May it enable you to grow your plants with love and care to harvest magnificent flowers and delicious vegetables.
We wish you many happy hours with your plants, numerous horticultural successes and a rich harvest. May your new greenhouse become a place of relaxation, creativity and closeness to nature.

Thank you for your trust in our products!

Safety instructions

General

Read and keep the assembly instructions
These assembly instructions are part of the greenhouse you have purchased (hereinafter referred to as the "product"). It contains important information on assembly and handling.
Read the assembly instructions carefully, especially the safety instructions, before installing and using the product. Failure to follow these assembly instructions may result in serious injury or damage to the product.
The assembly instructions are based on the standards and rules applicable in the European Union. When abroad, also observe country-specific guidelines and laws.
Keep the assembly instructions for further use. If you pass the product on to a third party, be sure to include these assembly instructions.

Intended use
The product is designed exclusively for growing or cultivating vegetables, flowers and other plants. It is not a recreation room for people and is not suitable for storing highly flammable or combustible materials. If a fire breaks out in the product, call the fire department immediately and make sure that there are no people in the product.
The product is intended exclusively for installation in gardens or similar green areas in private homes and is not suitable for commercial use. The product is not a children's toy.

Please note that the structure may be regulated by building regulations. Before assembling, ask your local building authority whether and how you are permitted to install the product. If you violate these regulations, your permit may be revoked. If you set up the product completely without authorization or violate the building regulations, you may have to dismantle the product again.
Only use the product as described in these assembly instructions. Any other use is considered improper and may result in damage to property or even personal injury.
Read all safety information and instructions. Failure to comply can cause serious injuries.
The manufacturer or dealer accepts no liability for damage caused by improper or incorrect use.

Safety instructions

Explosion hazard!
Exposure to sunlight can cause the product to heat up considerably. Explosive substances can explode and highly flammable or combustible substances can catch fire if they are stored in the product.
Do not store any highly flammable, combustible or explosive substances in the product.

Choking hazard!
Small children can put individual assembly parts in their mouths and swallow them or get caught in the packaging film. In both cases, they can suffocate.
- ▶ Keep small children away from all installation parts and the installation site.
- ▶ Make sure that small children do not put small parts in their mouths.
- ▶ Do not allow children to play with the packaging material.

Risk of injury!
During assembly, there is a particular risk of injury for children and people with reduced physical, sensory or mental abilities. They may not be able to assess risks correctly.
- ▶ Keep children and persons with reduced physical, sensory or mental capabilities away from the product during assembly.
- ▶ Do not allow children or persons with reduced physical, sensory or mental capabilities to assemble, clean, maintain or repair the product.

Risk of injury!
When stepping onto the roof, you may break through the roof due to your weight. **Do not walk on roof areas! Danger of falling!**

Risk of damage!
Improper handling of the product can result in damage to the product.
- ▶ Close the door and windows in windy and stormy weather.
- ▶ Remove snow and ice from the product.
- ▶ The roof is not designed to support a snow depth of more than 10 cm. Layer heights of 36 cm for dry snow, 10 cm for watery snow and 5.5 cm for ice correspond to a weight of approx. 50 kg/m2. The roof is not accessible.
- ▶ Do not place any heavy materials on the roof or the cladding sheets of the product.
- ▶ Do not hit the twin-wall sheets with hard objects at temperatures below freezing. These can break as a result.
- ▶ Do not step on the product if the individual parts are cracked or deformed. Only replace damaged components with suitable original spare parts.
- ▶ Do not group several products together at one location.
- ▶ The manufacturer is not liable for storm, wind, water and snow load damage (we recommend removing snow loads from the roof during the winter months). No guarantee is given for compensation for consequential and financial losses.
- ▶ To prevent theft, we recommend attaching a padlock to the sliding door (not included).

Notes on assembly

Before assembly

Check product and scope of delivery

Risk of damage!
If you open the packaging carelessly with a sharp knife or other pointed objects, the product can quickly become damaged. Be very careful when opening.

1. Remove the individual parts of the product from the packaging.
2. Use the parts lists to check whether the delivery is complete.
3. Check whether the individual parts of the product are damaged. If this is the case, do not install or use the product.
4. In the event of damage, please contact our service centre by email. For general questions please call us!

Determine installation location

Risk of damage!
Improper handling of the product can result in damage to the product.

- ▶ Set up the product in an easily accessible place that is slightly sheltered from the wind.
- ▶ Only place the foundation and the product on sufficiently firm ground.
- ▶ Do not place the product at the edge of your garden so that it is accessible from all sides.
- ▶ Place the product on a suitable foundation and fix the product to it once assembly is complete.
- ▶ Only place the product in a suitable location.

Prepare the foundation

Risk of damage!
The product is made of lightweight aluminium and hollow twin-wall sheets and is not heavy overall. Because of this and its size, it offers a lot of attack surface for wind and storms and must be particularly well secured.

- ▶ Secure the product to the foundation to prevent wind and storm damage.

To set up the product securely, fix it to a foundation. The foundation can be made of concrete or brick. **The screws, brackets and rawlplugs for securing the product to the foundation are not included in the scope of delivery.**

How to install the foundation:
To install the foundation, construct it at a right angle at a suitable location.

- ▶ Possible foundation variants are a strip foundation made of poured concrete, a strip foundation made of precast concrete blocks, a strip foundation made of concrete slabs and a point foundation made of concrete.
- ▶ Ensure that the foundation protrudes at least 50 mm from the ground.

Further information on the foundation and the foundation dimensions can be found on pages 8 and 9!

Assembly

Risk of injury!
Carry out the installation step by step and very carefully. If you do not follow these assembly instructions exactly, errors can occur which may be life-threatening.

- ▶ Assemble the product very carefully and step by step as described in the assembly instructions.
- ▶ Assemble the product with at least two adults.
- ▶ Wear protective gloves, safety goggles and safety shoes during installation.
- ▶ Secure each other well while assembling the upper parts of the product. Especially while you are standing on the ladder.
- ▶ Do not step on the roof of the product. There is a risk of falling and breaking through.

Risk of injury!
There may be sharp edges on the aluminium profiles. If you do not deburr the edges, you can cut yourself on them.

- ▶ File down sharp edges on the aluminium profiles with a file to prevent cutting yourself or snagging on them.

Risk of damage!
The movements during assembly can cause screw connections to loosen slightly. The product may become unstable as a result.

- ▶ After assembly, tighten all screw connections with an open-jaw or socket wrench.

Assemble the greenhouse together with at least one other adult.
For the assembly you need:

- A slotted screwdriver,
- A double-ended wrench SW 10,
- A cordless screwdriver,
- A tape measure,
- Screws/rawlplugs/brackets/barbs for fastening to the foundation,
- A spirit level,
- A ladder,
- Oil or similar lubricant and
- Combination pliers.

These parts are not included in the scope of delivery.

Note on our twin-wall sheets

Please note!
With twin-wall sheets, it should be noted that there is an inner and outer side. The pasted side or the side labeled "outside" is provided with a UV-protective coating. To avoid confusion, always remove the foil only after inserting the respective sheet.

Cleaning and maintenance

Cleaning

Risk of damage!
Improper handling of the product can result in damage to the product.

- ▶ Do not use any cleaning agents containing acid, solvents, bleach or corrosive substances for cleaning.
- ▶ Do not use wire or steel sponges, abrasive or scratching sponges, cloths or brushes for cleaning. Otherwise the surfaces may be damaged.
- ▶ Do not use a steam or high-pressure cleaner for cleaning. Otherwise the greenhouse may be damaged.
- ▶ Only clean the greenhouse with cold or lukewarm water.

Maintenance

Risk of damage!
The greenhouse presents a large target for wind and storms. This can cause screw connections to loosen quickly.

- ▶ After strong winds or storms, check that the twin-wall sheets are firmly in place and that the screw connections are tight.
- ▶ Check every three to four months whether the screw connections of the greenhouse are still tight.
- ▶ Tighten the screw connections if necessary.

Disposal

Dispose of packaging!
Dispose of the packaging according to type.
Put cardboard and cartons with the recycling paper.
Films in the recycling collection.

Dispose of the greenhouse!
Dispose of the greenhouse in accordance with the laws and regulations applicable in your country.

Technical specifications

These assembly instructions apply equally to all models in the "Jasmin" series

Model	**Jasmin 2**
Item number	JAS0206
Weight	41 kg
Dimensions (W x D)	192 x 131 cm
Height	192 cm
Frame material	Aluminium profiles
Twin-wall sheets mate-	Polycarbonate, with UV protection

Model	**Jasmin 3**
Item number	JAS0306
Weight	44 kg
Dimensions (W x D)	192 x 192 cm
Height	192 cm
Frame material	Aluminium profiles
Twin-wall sheets mate-	Polycarbonate, with UV protection

Model	**Jasmin 4**
Item number	JAS0406
Weight	52 kg
Dimensions (W x D)	192 x 256 cm
Height	192 cm
Frame material	Aluminium profiles
Twin-wall sheets mate-	Polycarbonate, with UV protection

Model	**Jasmin 5**
Item number	JAS0506
Weight	55 kg
Dimensions (W x D)	192 x 317 cm
Height	192 cm
Frame material	Aluminium profiles
Twin-wall sheets mate-	Polycarbonate, with UV protection

Guarantee declaration

Guarantee

Guarantee period
In addition to the seller's statutory liability for defects, we provide a 15-year guarantee on the construction and frame for greenhouses purchased from us and a 10-year guarantee for our twin-wall sheets.

The guarantee period begins on the date the goods are taken over. Any replacement deliveries will not result in an extension of the guarantee period.

Scope of guarantee
The guarantee for our greenhouses applies exclusively to the construction and frame. Delivery components such as seals, plastic parts and connecting elements are not covered by the guarantee. The guarantee also does not extend to our supplementary greenhouse accessories.
The guarantee for our twin-wall sheets extends exclusively to their weather resistance. It only applies in connection with the purchase of one of our greenhouses. In the event of justified claims under the guarantee, the following guarantee plan applies to the twin-wall sheets:

Time from date of purchase Material replacement:
- Up to 5 years 100 %
- In the 6. Year 75 %
- In the 7. Year 60 %
- In the 8. Year 45 %
- In the 9. Year 30 %
- In the 10. Year 15 %

Guarantee conditions
The basic prerequisites for claiming the guarantee are professional installation and proper maintenance of both the frame and the twin-wall sheets. The guarantee expires in the event of reassembly.

Guarantee exclusion
Furthermore, the guarantee does not cover defects and damage that are directly or indirectly attributable to:
- Use of the material that is not in accordance with our instructions
- Damage due to improper handling before, during or after the installation work
- Damage due to force majeure
- Improper foundations and fastenings
- An unsuitable location (e.g. particularly exposed to wind or heat)
- Insufficiently secured anchoring of the greenhouse
- On-site modifications to the delivered item
- Improper cleaning with unsuitable cleaning agents (e.g. aggressive cleaning agents, salt water, etc.)
- Lack of care (cleaning) of the product
- Contact of the material with incompatible chemicals
- Incorrect installation of the twin-wall sheets, as well as causing scratches and
- Stresses or the use of adhesives or sealants or other incompatible materials
- Colour changes of the powder-coated surface due to solar radiation
- A change in the surface of the bare pressed parts due to the formation of a natural oxide layer
- Maintenance joints (silicone joints)
- Commercial use

Guarantee claims can only be made in conjunction with the original proof of purchase, provided that the customer has fulfilled his payment obligations under the purchase contract.
If a guarantee claim is made within the warranty period and is deemed justified, we will supply a replacement free of charge. This guarantee does not cover any other warranty claims, such as compensation for direct or indirect damage or other consequential damage.
Any further liability, e.g. for the removal or installation of claimed or subsequently delivered parts or for other ancillary costs or consequential damage, is not covered by this guarantee. Such liability exists only within the scope of the statutory provisions.

The roof of your greenhouse must be cleared of snow and ice during the winter months!

Types of foundations

The foundation for your greenhouse

An important task!
With a solid greenhouse foundation, do-it-yourselfers can be sure that their structure can withstand extreme weather conditions and that the valuable plants are reliably protected from the elements.
As a load-bearing substructure, the foundation of a greenhouse should guarantee stability under all conceivable weather conditions. All static forces, such as dead load and roof load, wind pressure and its suction must be able to be absorbed by the foundation.
In addition, it must not sink into the ground or lift off if it is a lightweight construction. Not to forget, the protective function against heat loss towards the ground, which is especially important for the plants used.
It is not recommended to install a greenhouse in the garden without appropriate anchoring.

Does every greenhouse need a base?
In principle, however, a foundation is required for almost every construction project in contact with the ground. A greenhouse should also stand on a firm foundation.

Types of foundations

A Concrete strip foundation
A concrete strip at least 10 cm thick is the ideal foundation. The easiest way to build a concrete foundation is to use formwork blocks from the DIY store. These are set up according to the required dimensions, aligned and then filled with concrete. The foundation must always be frost-proof, i.e. 80 cm deep. It's best to consult a trusted expert to determine if a shallower foundation is sufficient for your area. You will find the ideal dimensions for the foundation at the bottom of this page.

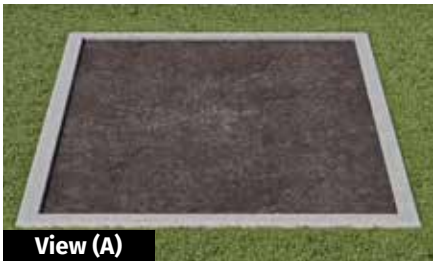
View (A)


Section (A)

B Strip foundation made of precast concrete blocks (curbstones)
Many customers find the construction of a concrete foundation too complex, cost-intensive or sustainable. Alternatively, you can also dig in ready-made concrete blocks and fix the greenhouse to them. Example: Suitable kerbstones and boundary stones are available in DIY stores and building materials stores. These stones are very heavy and yet relatively inexpensive. All you need to do is dig the required trench and move the stones. We recommend placing the stones in a bed of gravel, as this makes it relatively easy to achieve an even surface. You already have a simple, inexpensive yet very practical foundation. This variant is not suitable for all soil conditions - especially if the soil is still settling.

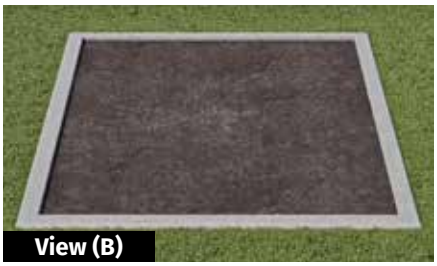
View (B)


Cut (B)

C Concrete point foundation
You can also place your greenhouse on individual foundation points and secure it to them. However, it requires that you have opted for a foundation frame as an accessory! However, the basic prerequisite for such an attachment is that the foundation points are horizontal. Point foundations are only suitable on flat, level plots! We recommend placing the foundation points at the four corners of the greenhouse. Depending on the size of the house, we also recommend a foundation point at the front and back, as well as on the long sides of the greenhouse.

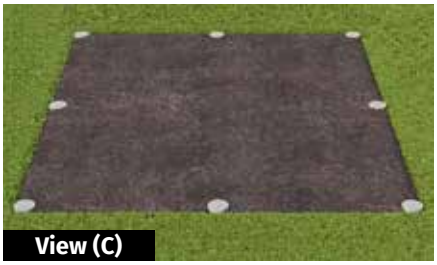
View (C)


Cut (C)

D Strip foundation made of concrete slabs
For a hobby greenhouse with a base area of a few square meters, a foundation of paving slabs laid on compacted gravel and a good five centimeters of chippings is sufficient. Effort and costs therefore remain low. More solid foundations are of course always possible and offer more stability. Please note, however, that a foundation of paving slabs is not frost-free and that the slabs can therefore slip or settle over the years.


View (D)


Cut (D)

Full-surface laying of concrete or concrete slabs
If you only grow potted plants in your greenhouse or only use it to overwinter your plants, it is also possible to place the greenhouse on a concrete surface.

Notice!

Brackets, rawlplugs and screws are not included. **These accessories can be purchased from our store as accessories!**

Your greenhouse is made of lightweight aluminium and hollow twin-wall sheets. Both are not particularly heavy. However, storms and wind have a particularly large attack surface. For this reason, anchor your greenhouse particularly securely to the ground. Pay particular attention to the quality of the materials used!

You can attach your new greenhouse to the ground or to a foundation in various ways: You dig your aluminium foundation halfway into the ground and attach it with optional ground screws (min. 30 cm long) Alternatively, you can attach the greenhouse directly to a stable base (concrete or wall foundation). See the two variants A or B as listed below. The foundation must be built at right angles and level. Place your finished greenhouse on the foundation.

Variant A
Drill a hole through the floor profile (see detail A). Attach the greenhouse to the foundation using suitable screws and rawlplugs (not included!).
Variant B
Fastening the house with brackets. These brackets can be attached to the floor profile with screws (see detail B). No drilling work on the house is necessary here. The greenhouse can then be attached to the foundation using suitable rawlplugs and screws.
(The brackets are not included in the scope of delivery!).

Concrete or masonry foundation

You can find the right dimensions here

Model	Wide Internal dimen-	Length Internal dimen-	Height (H)	Level (K) above ground
Jasmin 2 Greenhouse	1780 mm	1170 mm	ca. 800 mm	min. 50 mm
Jasmin 3 Greenhouse	1780 mm	1780 mm	ca. 800 mm	min. 50 mm
Jasmin 4 Greenhouse	1780 mm	2420 mm	ca. 800 mm	min. 50 mm
Jasmin 5 Greenhouse	1780 mm	3030 mm	ca. 800 mm	min. 50 mm

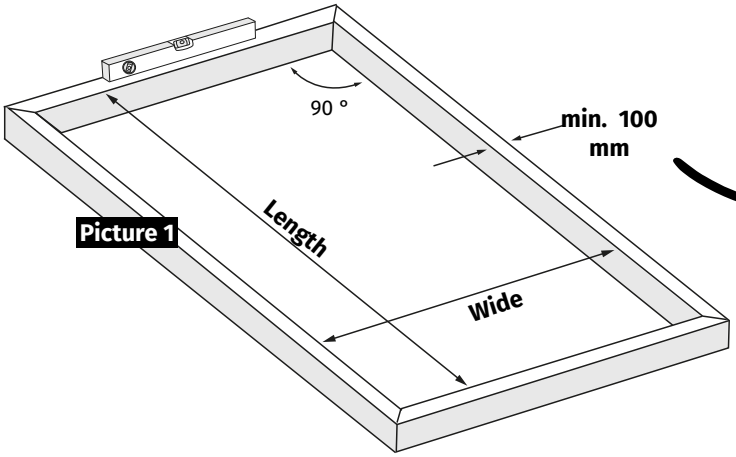

Picture 1

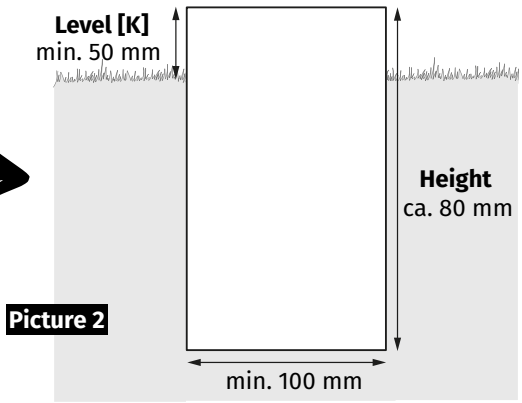

Picture 2

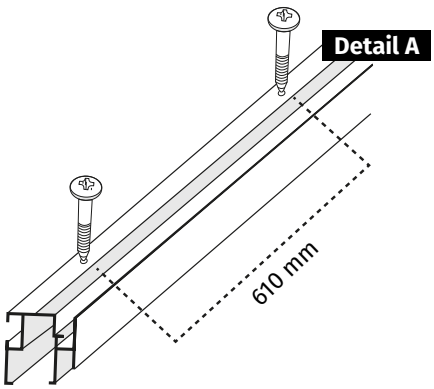

Detail A

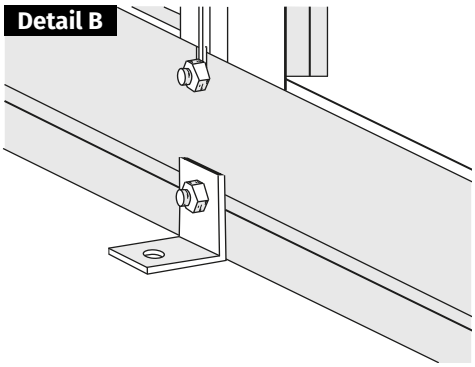
Detail B

Assembly of the aluminium foundation

Parts list

You will need the following for this assembly step:

1/1 Aluminium foundation package (package 1 of 1)

Part	Item number	Designation	Length	Jasmin 2	Jasmin 3	Jasmin 4	Jasmin 5
1	24-1862.1	Foundation profile 1867	1867 mm	**2**	**4**	**2**	**4**
	24-1249.1	Foundation profile 1252	1252 mm	**2**	**-**	**4**	**2**
2	21-0050.1	Foundation longitudinal con-	50 mm	**-**	**-**	**2**	**2**
3	25-0020.1	Foundation hooks	20 mm	**10**	**12**	**14**	**16**
4	NG210	Foundation - Corner connector		**4**	**4**	**4**	**4**
5	9040556	Self-tapping screws 4.8x13 mm		**20**	**24**	**28**	**32**
6	690509	M6x12 mm screw		**16**	**16**	**24**	**24**
7	690547	Nut M6		**16**	**16**	**24**	**24**

Attention, important note!

If you have decided to purchase an optional aluminium foundation, please note that this must be installed with the greenhouse on the front, side and back walls during assembly. **Never install the foundation alone and then place the greenhouse on top!**

Notice!

If you have decided to purchase an aluminium foundation, please note that the foundation profiles must be mounted on the floor profiles of the greenhouse before the actual installation of the greenhouse!

Important: For the 1252 mm floor profiles, the screws for installing the foundation must also be inserted now! To do this, the 1252 mm floor profiles are connected to the foundation profiles with two foundation hooks each and the 1867 mm floor profiles with three foundation hooks each.

Attaching the floor profiles to the foundation profiles

Make sure that the floor profile that is placed on the foundation profile is always the same length. It is important that the profiles are exactly flush.

Each of the 1252 mm floor profiles is screwed to the foundation profile with two foundation hooks, each of the 1867 mm floor profiles with three foundation hooks.

1a

Take one floor profile and one foundation profile of the same length.

1b

Place the floor profile on the foundation profile and ensure that the ends of the two profiles are exactly flush.

1c

Take the foundation hook and the corresponding 4.8x13 mm self-tapping screws.

1d

Place the foundation hooks about 10 cm from the ends in both the floor profile and the foundation profile.

1e

Connect the foundation hook by screwing in the 4.8x13 mm self-tapping screws. The floor profile with the length 1867 is also screwed in the middle.

Important note!

The base profiles are fitted before the front or back wall is assembled. Once the floor profiles have been installed, please start assembling the greenhouse. To do this, go to page 38 of the assembly instructions.

Please note that there are differences to the illustrations in the instructions when connecting the longitudinal profiles and when assembling the longitudinal parts on the front and back wall. You will find the corresponding pictures in the respective installation steps with and without aluminium foundation!

Part	Item no.	Designation	Length	Jasmin 2	Jasmin 3	Jasmin 4	Jasmin 5
	PQS05-1867.1	Floor profile front - Back wall	1867 mm	**2**	**2**	**2**	**2**
	PQS01-1307.1	Side corner profile	1307 mm	**4**	**4**	**4**	**4**
	PQS03-1053.1	Roof corner profile	1053 mm	**4**	**4**	**4**	**4**
	PQS11-1652.1	Brace back wall	1652 mm	**2**	**2**	**2**	**2**
	PQS18-1652.1	Door entrance profile	1652 mm	**2**	**2**	**2**	**2**
	PQS16-640.1	Cross brace	640 mm	**1**	**1**	**1**	**1**
	PQS18-593.1	Window support	593mm	**1**	**1**	**1**	**1**
	PQS06-613.1	Window hinge profile	613 mm	**2**	**2**	**2**	**2**
	PQS07-501.1	Window side	501 mm	**2**	**2**	**2**	**2**
	PQS15-1640.1	Side door profile	1640 mm	**2**	**2**	**2**	**2**
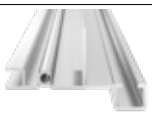	PQS12-603.1	Top door profile	603 mm	**1**	**1**	**1**	**1**
	PQS02-603.1	Center door profile	603 mm	**1**	**1**	**1**	**1**
	PQS13-603.1	Bottom door profile	603 mm	**1**	**1**	**1**	**1**
	PQS17-1255.1	Door roller profile	1255 mm	**1**	**1**	**1**	**1**

Part	Item no.	Designation	Length	Jasmin 2	Jasmin 3	Jasmin 4	Jasmin 5
	PQS05-1252.1	Floor profile (2-section)	1252 mm	**2**	**-**	**4**	**2**
	PQS05-1867.1	Floor profile (3-section)	1867 mm	**-**	**2**	**-**	**2**
	PQS09-1252.1	Rain gutter (2-section)	1252 mm	**2**	**-**	**4**	**2**
	PQS09-1867.1	Rain gutter (3- section)	1867 mm	**-**	**2**	**-**	**2**
	PQS04-1252.1	Ridge (2-section)	1252 mm	**1**	**-**	**2**	**1**
	PQS04-1867.1	Ridge (3 section)	1867 mm	**-**	**1**	**-**	**1**
	PQS11-1307.1	Side wall brace	1307 mm	**2**	**4**	**4**	**6**
	PQS11-1053.1	Roof brace	1053 mm	**2**	**4**	**4**	**6**
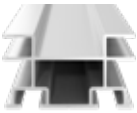	PQS08-1307.1	Coupling profile side panel	1307 mm	**-**	**-**	**2**	**2**
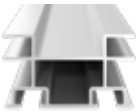	PQS08-1053.1	Coupling profile roof	1053 mm	**-**	**-**	**2**	**2**
	1502-1447.1	Wind bracing front, back and side walls	1447 mm	**8**	**8**	**8**	**8**
	1502-639.1	Wind bracing front and back wall horizontal	639 mm	**5**	**5**	**5**	**5**
	1502-1214.1	Wind bracing roof	1214 mm	**-**	**-**	**4**	**4**
	1502-344.1	Door rail support	344 mm	**1**	**1**	**1**	**1**
	PQS10-502.1	H-profile	591 mm	**6**	**6**	**6**	**6**
	126-0025.1	Reinforcement of ridge and rain gutter	25 mm	**-**	**-**	**3**	**3**

Part	Item no.	Designation	Length	Jasmin 2	Jasmin 3	Jasmin 4	Jasmin 5
	PQS35	Ridge knot, rain gutter	-	**6**	**6**	**6**	**6**
	PQS41	Drain left	-	**2**	**2**	**2**	**2**
	PQS42	Drain right	-	**2**	**2**	**2**	**2**
	PQS31	Corner knot Floor knot	-	**4**	**4**	**4**	**4**
	PQS34	Ridge cover	-	**2**	**2**	**2**	**2**
	NG205	Cross brace knot	-	**4**	**4**	**4**	**4**
	PQS38	Straight connector knot	-	**1**	**2**	**2**	**2**
	PQS37	Cranked connector knot	-	**3**	**6**	**6**	**9**
	PQS32	Double connector straight	-	**-**	**-**	**2**	**2**
	PQS33	Cranked double connector	-	**-**	**-**	**3**	**3**
	PQS36	T-connector floor	-	**6**	**8**	**8**	**10**
	PQS40	L-connector window	-	**1**	**1**	**1**	**1**
	CT510 GAR3440	Hobby door seal	3440 mm	**1**	**2**	**2**	**2**
	664548	Door roller	-	**2**	**2**	**2**	**2**
	664555	Axle bolt	-	**2**	**2**	**2**	**2**
	665973	Door rail protection	-	**2**	**2**	**2**	**2**
	690509	M6x12 mm screw	-	**100**	**113**	**149**	**162**
	690547	M6x16 mm screw	-	**1**	**1**	**1**	**1**
	690547	Nut M6	-	**104**	**117**	**153**	**166**
	690547	Self-locking nut	-	**1**	**1**	**1**	**1**
	664753	Sheet metal screws 4.2x22 mm	-	**10**	**10**	**10**	**10**
	BS 3.9x13	Self-tapping screws 3.9 x 13	-	**4**	**4**	**4**	**4**
	690622	Truss-head screw	-	**2**	**2**	**2**	**2**
	664129	Retaining clips roof corner profi-le for 6 mm glazing	1250 mm	**8**	**10**	**12**	**14**
	665958	Hobby window display	-	**1**	**1**	**1**	**1**

Item no.	Designation	Size	Jasmin 2	Jasmin 3	Jasmin 4	Jasmin 5
1319/610/6	Front/back wall and side wall panel	1319x610x6 mm	**9**	**11**	**13**	**15**
360/610/6/LI	Left gable side	360x610x6 mm	**2**	**2**	**2**	**2**
360/610/6/RE	Right gable side	360x610x6 mm	**2**	**2**	**2**	**2**
350/610/6	Back panel small	350x610x6 mm	**1**	**1**	**1**	**1**
185/610/6	Gable triangle front and back wall	185x610x6 mm	**2**	**2**	**2**	**2**
781/610/6	Door panel	781x610x6 mm	**2**	**2**	**2**	**2**
521/610/6	Window panel	521x610x6 mm	**1**	**1**	**1**	**1**
531/610/6	Roof panel under the window	531x610x6 mm	**1**	**1**	**1**	**1**
1067/610/6	Roof panel	1067x610x6 mm	**3**	**5**	**7**	**9**

Front wall

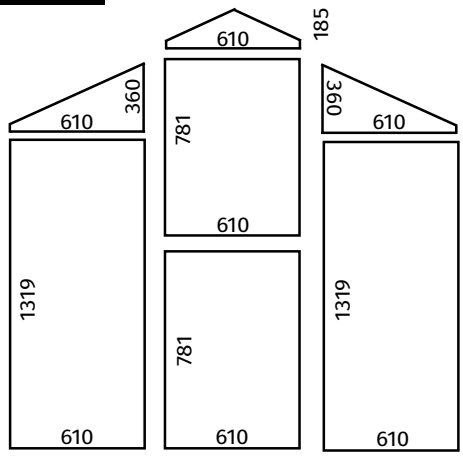

Back wall

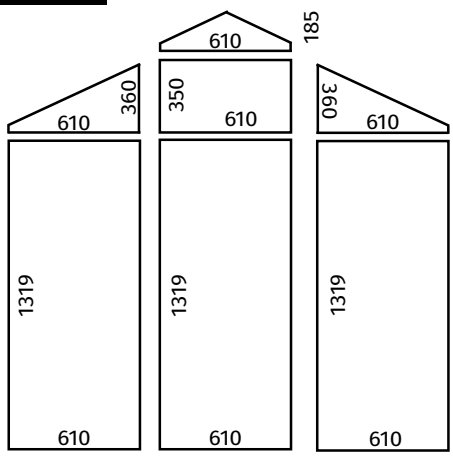

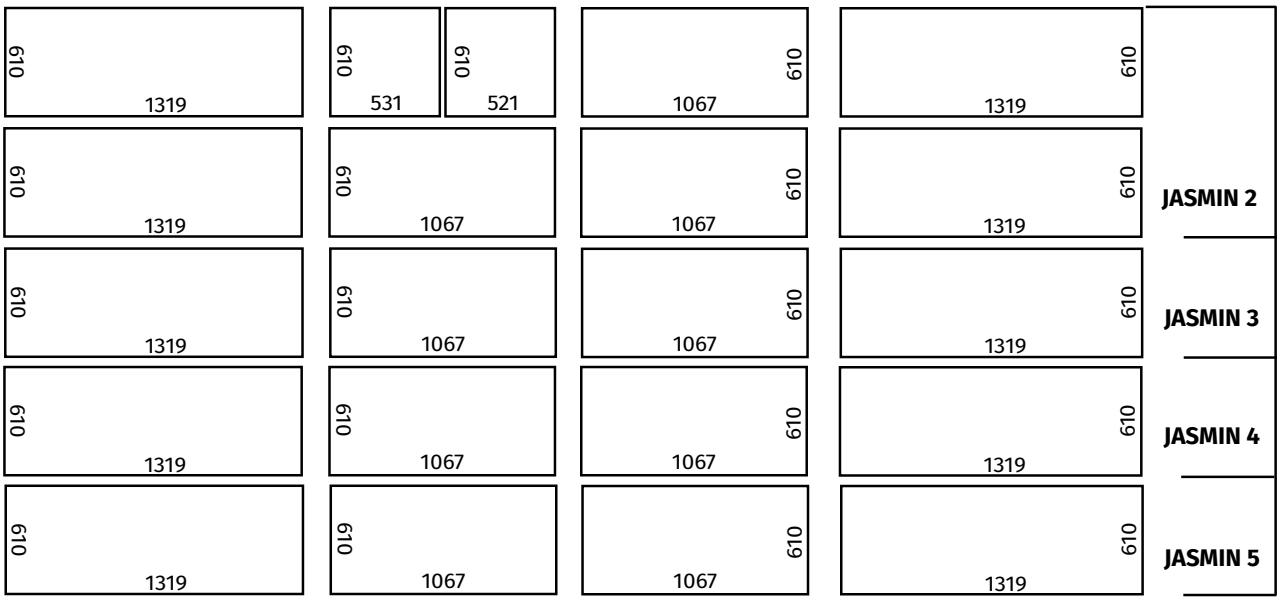

Notice!

To ensure smooth installation of the ridge, gutters and floor profiles, it is important to mark out the layout in advance.

The markings are later used to determine the exact position of the braces. Use a marker to mark the distances according to the sketches below.
You should definitely carry out this preparation before the actual start of installation to save time and effort later!

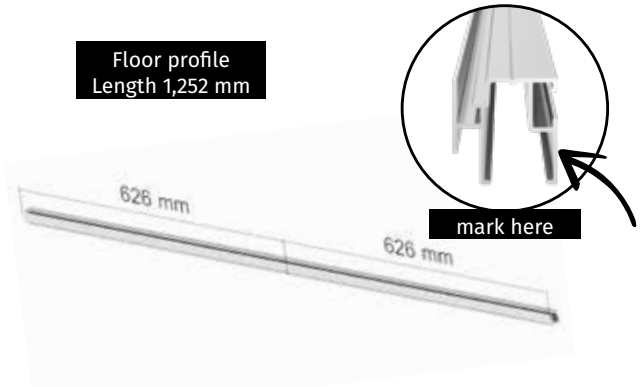

Pick up the floor profiles with a length of 1252 mm and mark the exact center of the profile.

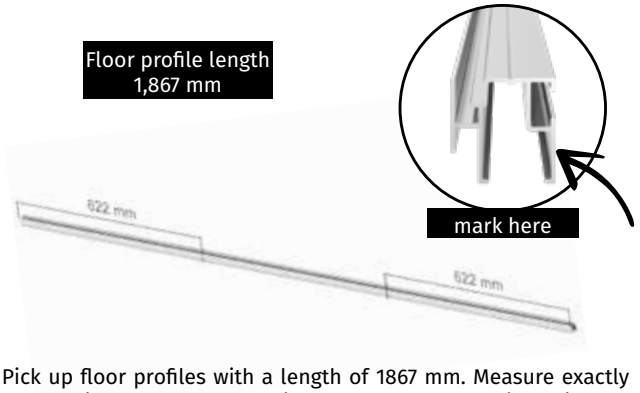

Pick up floor profiles with a length of 1867 mm. Measure exactly 622 mm inwards from each side and mark these points with the marker.

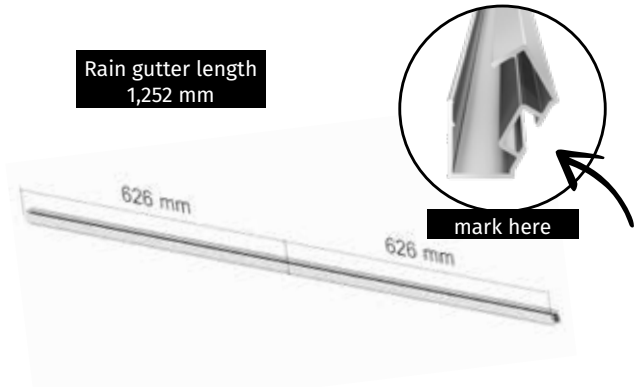

Pick up the gutter with a length of 1252 mm and mark the exact center of the profile.

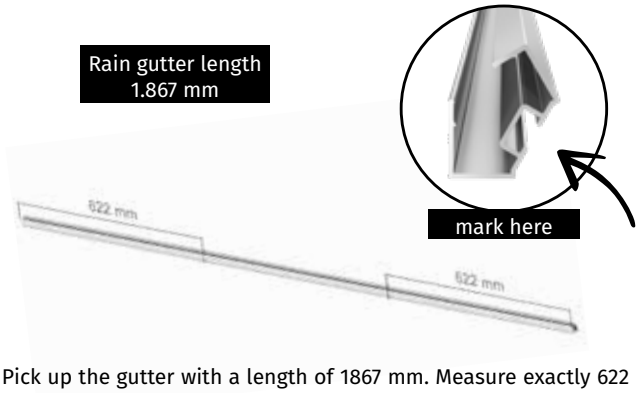

Pick up the gutter with a length of 1867 mm. Measure exactly 622 mm inwards from each side and mark these points with the marker.

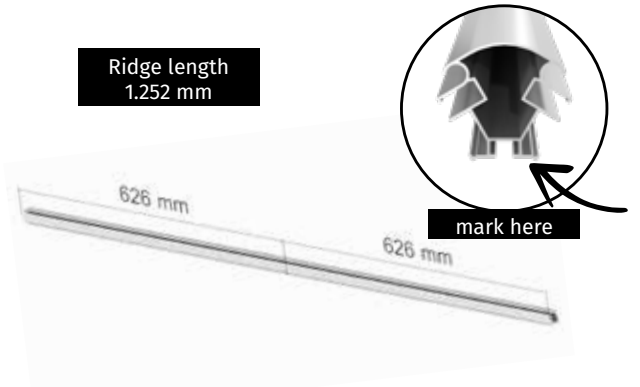

Pick up the ridge profile with a length of 1252 mm and mark the exact center of the profile.

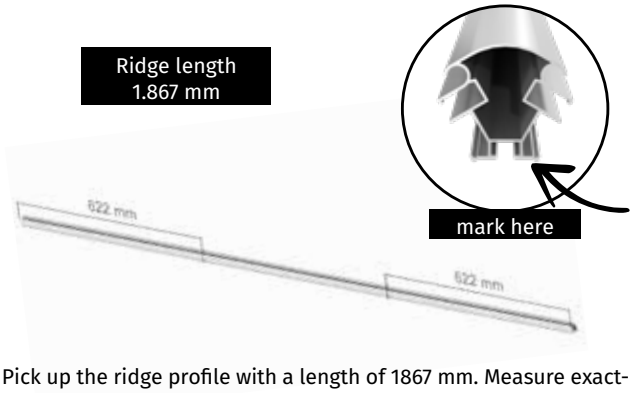

Pick up the ridge profile with a length of 1867 mm. Measure exactly 622 mm inwards from each side and mark this point with the marker.

- Blank page -

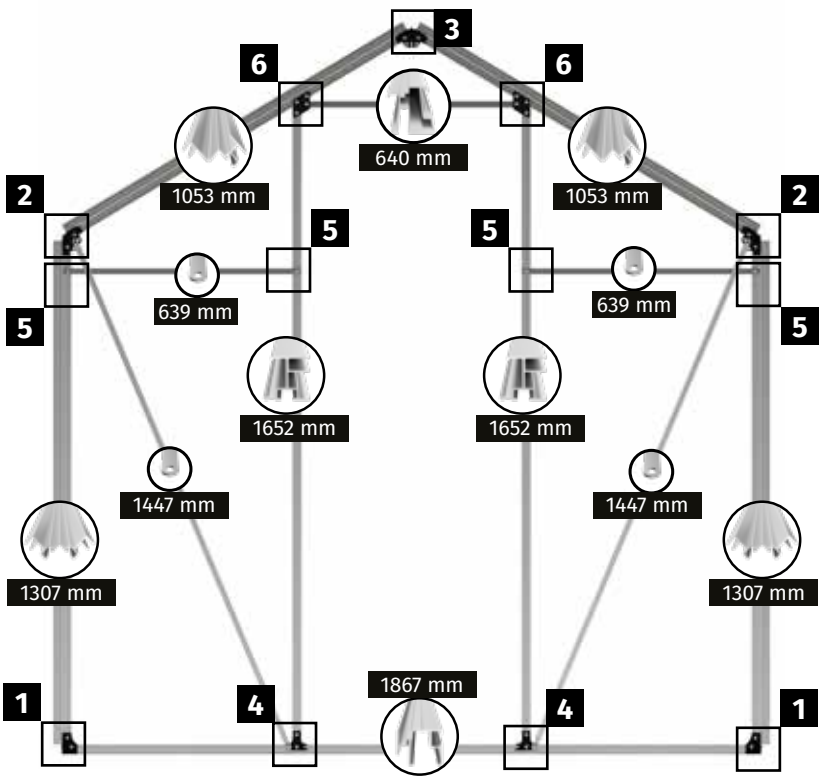

Note

The front wall is best installed lying flat on the floor.

Before starting assembly, place all parts of the front panel on the floor as shown in the sketch.

To simplify assembly, you will find all screw connection points shown in detail on the next page.

Using this overview, you can see exactly what the individual connection points will look like when assembly is complete.

You will need the following for this assembly step:

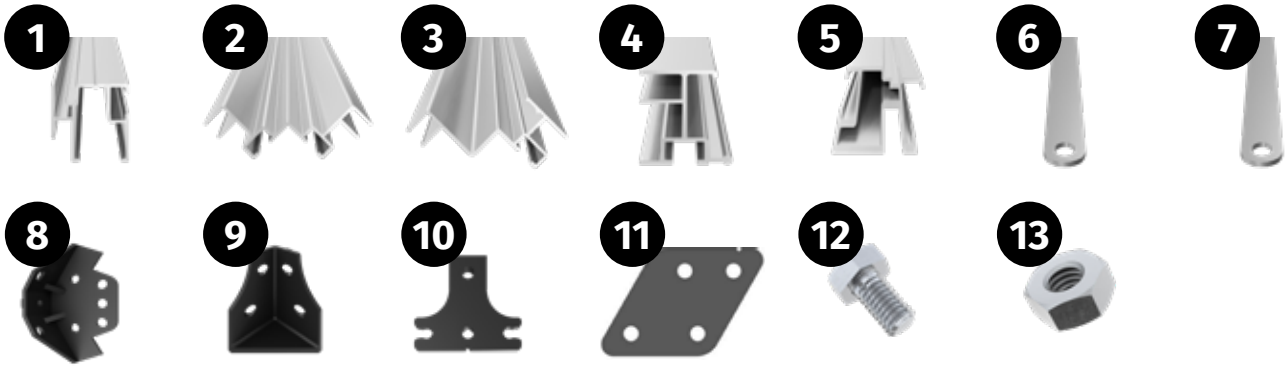

Part	Item number	Designation	Length	Jasmin 2	Jasmin 3	Jasmin 4	Jasmin 5
1	PQS05-1867.1	Soil profile 1867	1867 mm	**1**	**1**	**1**	**1**
2	PQS01-1307.1	Side corner profile 1307	1307 mm	**2**	**2**	**2**	**2**
3	PQS03-1053.1	Roof corner profile 1053	1053 mm	**2**	**2**	**2**	**2**
4	PQS18-1652.1	Door entrance profile 1652	1652 mm	**2**	**2**	**2**	**2**
5	PQS16-640.1	Cross brace 640	640 mm	**1**	**1**	**1**	**1**
6	1502-1447.1	Wind bracing	1447 mm	**2**	**2**	**2**	**2**
7	1502-0639.1	Wind bracing	639 mm	**2**	**2**	**2**	**2**
8	PQS35	Ridge-rain gutter knot	-	**3**	**3**	**3**	**3**
9	PQS31	Corner knot Floor knot	-	**2**	**2**	**2**	**2**
10	PQS36	T-connector floor	-	**2**	**2**	**2**	**2**
11	NG205	Cross brace knot	-	**2**	**2**	**2**	**2**
12	690509	M6x12 mm screw	-	**30**	**30**	**30**	**30**
13	690547	Nut M6	-	**30**	**30**	**30**	**30**

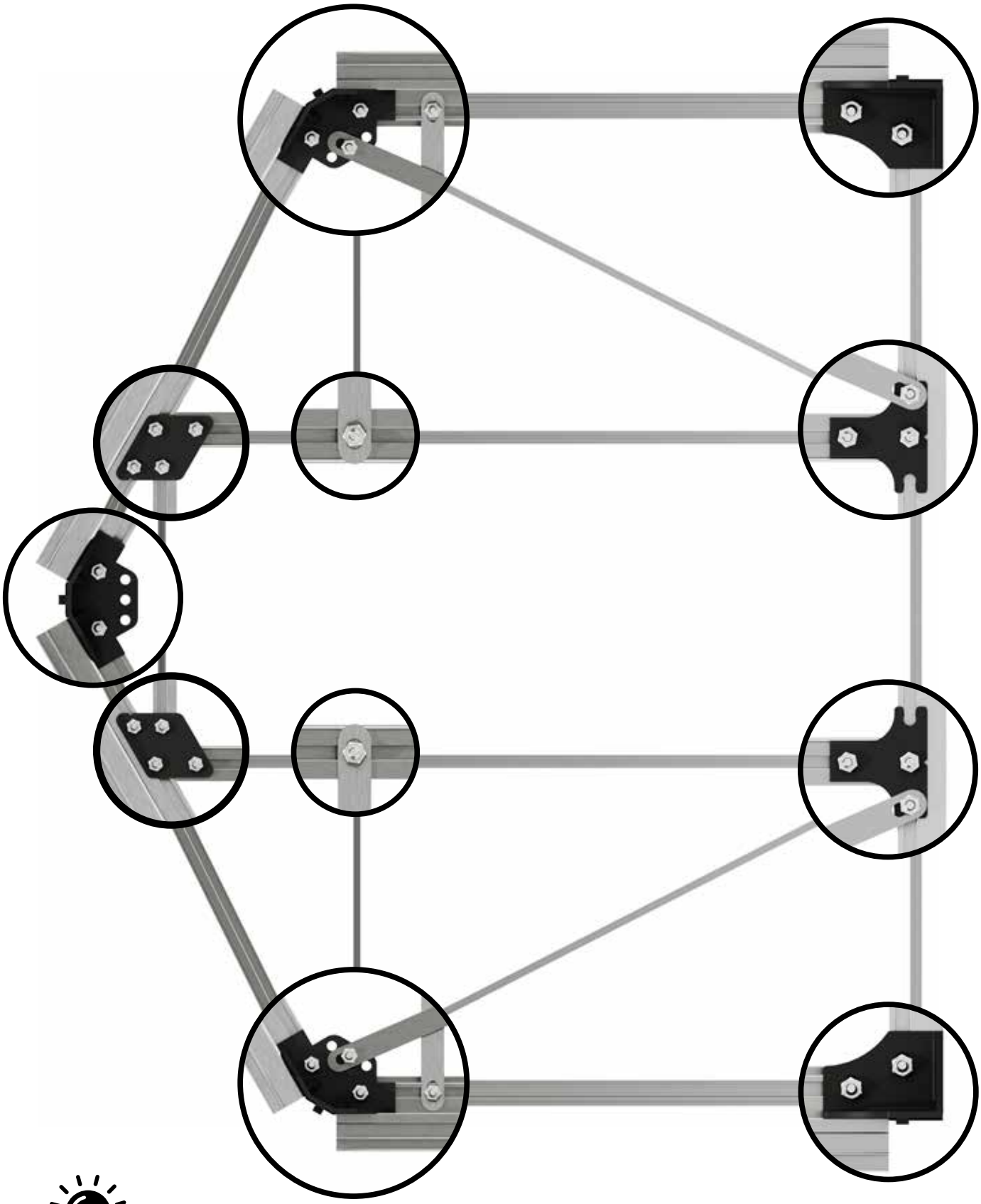

Note

If you have decided to purchase a foundation, the steps in Figures 1a to 1p will change. **See page 47!**

1a **right**

Take a floor profile 1867 mm, a floor knot, three M6x12 mm screws and an M6 nut.

1b **right**

Insert the three M6x12 mm screws into the screw channel of the floor profile.

1c

Place the floor knot so that an M6x12 screw protrudes through the hole provided. Ensure that the profile butts against the outer limiting lug of the floor knot.

1d **right**

Screw the floor knot firmly to the floor profile using an M6 nut.

1e **left**

For the second side of the floor profile, use a floor knot, three M6x12 mm screws and an M6 nut.

1f **left**

Insert the three M6x12 mm screws into the screw channel of the floor profile.

1g

Place the floor knot so that an M6x12 screw protrudes through the hole provided. Ensure that the profile butts against the outer limiting lug of the floor knot.

1h **left**

Screw the floor knot firmly to the floor profile using an M6 nut.

1i **right**

Take a side corner profile, an M6x12 mm screw and an M6 nut.

1j **right**

Insert the M6x12 mm screw into the screw channel of the side corner profile.

1k **right**

Place the side corner on the floor profile. Set the
Position the side corner so that the M6x12 screw protrudes through the hole provided in the floor knot.

1l **right**

Screw the side corner profile to the floor knot using the M6 nut.

1m **left**

Pick up the second side corner profile, an M6x12 bolt and an M6 nut.

1n **left**

Insert the M6x12 mm screw into the screw channel of the side corner profile.

1o **left**

Place the side corner on the floor profile. Set the
Position the side corner so that the M6x12 screw protrudes through the hole provided in the floor knot.

1p **left**

Screw the side corner profile to the floor knot using the M6 nut.

2a **right**

Take a corner connector (PQS35), the roof corner profile and three M6x12 mm screws and three M6 nuts.

2b **right**

Insert two M6x12 mm screws into the screw channel of the side corner profile and one screw into the screw channel of the roof corner profile.

2c **right**

Position the corner connector (PQS35) so that the two M6x12 screws protrude through the holes provided.

2d **right**

Align the profiles so that they butt firmly against the plastic corner connector. Screw the corner connector firmly to the profiles using two M6 nuts. Secure the remaining M6x12 mm screw with an M6 nut to prevent it from slipping.

2e **left**

Take a corner connector (PQS35), the roof corner profile and three M6x12 mm screws and three M6 nuts.

2f **left**

Insert two M6x12 mm screws into the screw channel of the side corner profile and one screw into the screw channel of the roof corner profile.

2g **left**

Position the corner connector (PQS35) so that the two M6x12 screws protrude through the holes provided.

2h **left**

Align the profiles so that they butt firmly against the plastic corner connector. Screw the corner connector firmly to the profiles using two M6 nuts. Secure the remaining M6x12 mm screw with an M6 nut to prevent it from slipping.

3a

Take a corner connector (PQS35), six M6x12 mm screws and six M6 nuts.

3b

Insert three M6x12 mm screws into the screw channel of the left and right roof corner profiles.

3c

Position the corner connector so that two M6x12 screws protrude through the holes provided.

3d

Align the profiles so that they butt firmly against the corner connector. Screw the corner connector firmly to the profiles using two M6 nuts. Secure the four M6x12 mm screws with M6 nuts to prevent them from slipping.

4a

Take a door entrance profile, a connector knot (PQS36), an M6x12 mm screw and three M6 nuts.

4b

Slide the two M6x12 screws from the outside to the marking on the floor profile.

4c

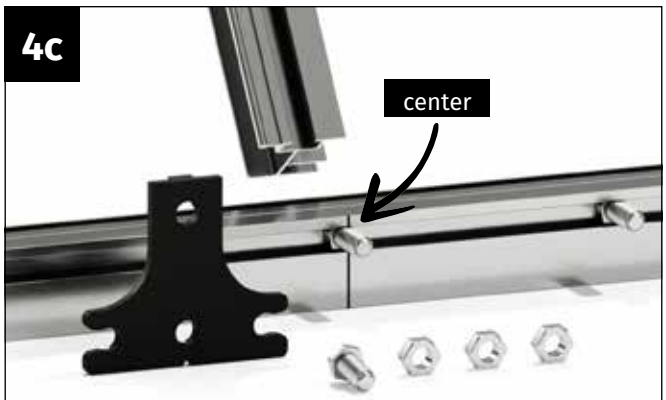

Position an M6x12 screw exactly in the center of the marking on the floor profile.

4d

Place the connector knot (PQS36) so that the M6x12 screw protrudes through the hole provided.

4e

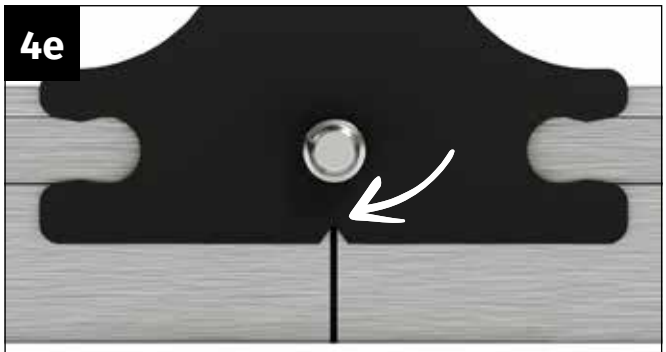

Check again that the connector knot is exactly centered on the marking. The V-punching of the connector knot must correspond exactly with the marking.

4f

Screw the connector knot firmly to the floor profile using an M6 nut.

4g

Insert one M6x12 mm screw into the screw channel of the door entrance profile.

4h

Place the door entry profile on the floor profile. Insert the M6x12 screw through the hole in the connector knot.

4i

Screw the door entrance profile firmly to the floor profile using an M6 nut.

4j

Clip the remaining M6x12 mm screw into the opening of the connector knot. This requires some force, as the position of the screw is determined by the connector knot. Loosely screw the M6 nut to the M6x12 mm screw.

5a

Switch to the top of the door entry profile. Pick up an M6x12 mm screw.

5b

Insert the M6x12 mm screw into the screw channel of the door entrance profile.

5c

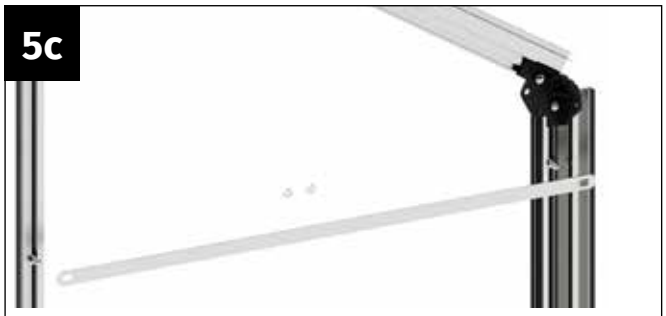

Slide the M6x12 mm screw of the door entry profile downwards in the screw channel. Align the screw of the side corner profile and the screw of the door entrance profile exactly horizontally. Take a wind brace and two M6 nuts.

5d

Place the wind brace on the two M6x12 mm screws so that they protrude through the holes in the wind brace.

5e

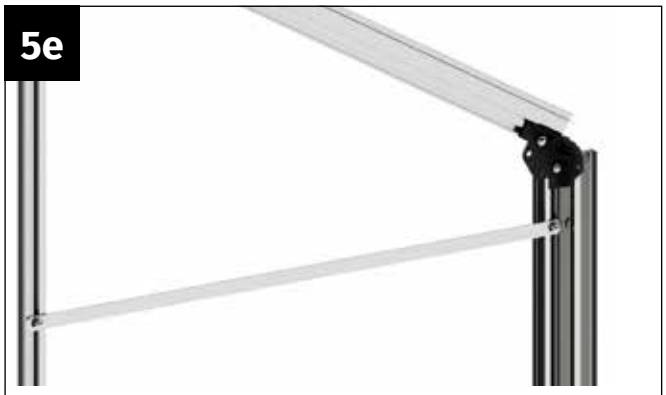

Align the wind bracing so that it is exactly horizontal and screw it in place with two M6 nuts.

6a

Screw the two M6 nuts of the M6x12 mm screws previously inserted in the ridge area and guide the screws towards the upper end of the door entrance profile.

6b

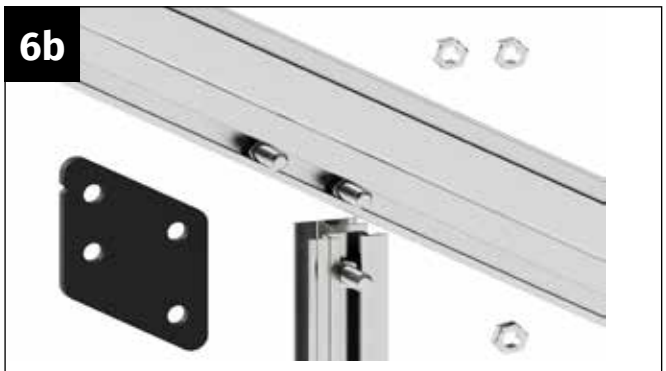

Pick up the knot cross brace as well as an M6x12 mm bolt and an M6 nut. Insert the screw into the screw channel of the door entrance profile.

6c

Do not mount upside down!

Place the knot of the cross brace so that the three screws protrude through the holes in the knot.

6d

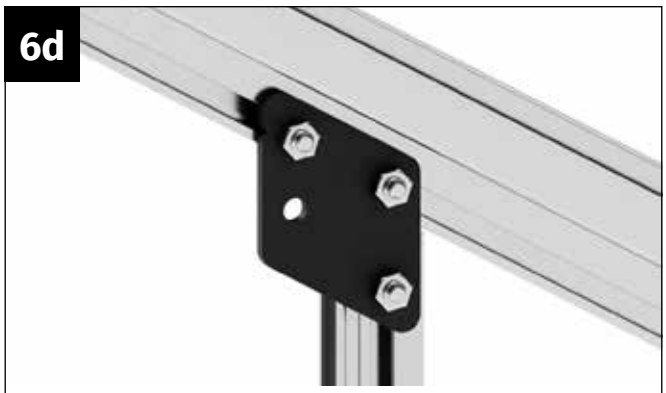

Screw the knot of the cross brace firmly to the roof corner profile and the door entrance profile using M6 nuts.

Repeat

Repeat steps 4 to 6 on the left front wall!

7a

Take the cross brace, an M6x12 mm bolt and an M6 nut.

7b

Insert the M6x12 mm screw into the screw channel of the cross brace.

7c

Position the cross brace so that the screw protrudes through the hole in the plastic connector knot.

7d

Fix the cross brace to the plastic connector knot with an M6 nut.

Repeat

Repeat step 7 on the left side of the cross brace!

8a

Use a wind brace, an M6x12 mm bolt and an M6 nut.

8b

Insert the M6x12 mm screw from the outside through the center hole of the corner connector.

8c

Place the wind brace on the M6x12 mm screw so that the screw protrudes through the hole in the wind brace.

8d

Screw the wind bracing to the corner connector using an M6 nut.

8e

Guide the lower part of the wind brace to the connector knot of the door entrance profile and remove the M6 nut.

8f

Place the wind brace on the M6x12 mm screw so that the screw protrudes through the hole in the wind brace.

8g

Screw the wind brace to the connector knot using an M6 nut.

Repeat

Repeat step 8 to screw on the wind bracing on the second side of the front wall!

2. Assembling the back wall

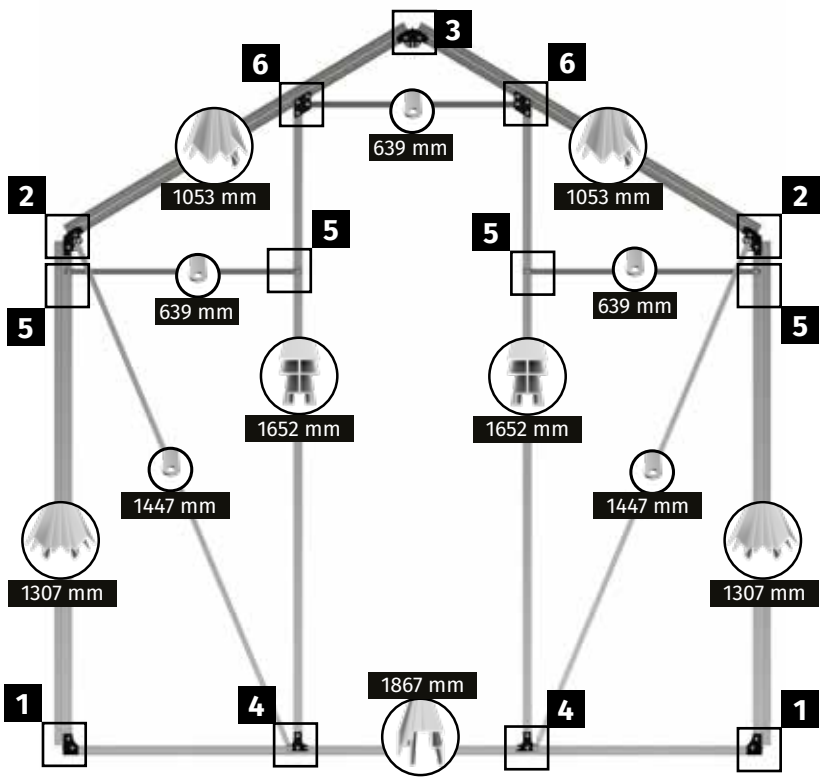

Note

The back wall is best installed lying flat on the floor.

Before starting assembly, place all parts of the back wall on the floor as shown in the sketch.

To simplify assembly, you will find all screw connection points shown in detail on the next page.

Using this overview, you can see exactly what the individual connection points will look like when assembly is complete.

You will need the following for this assembly step:

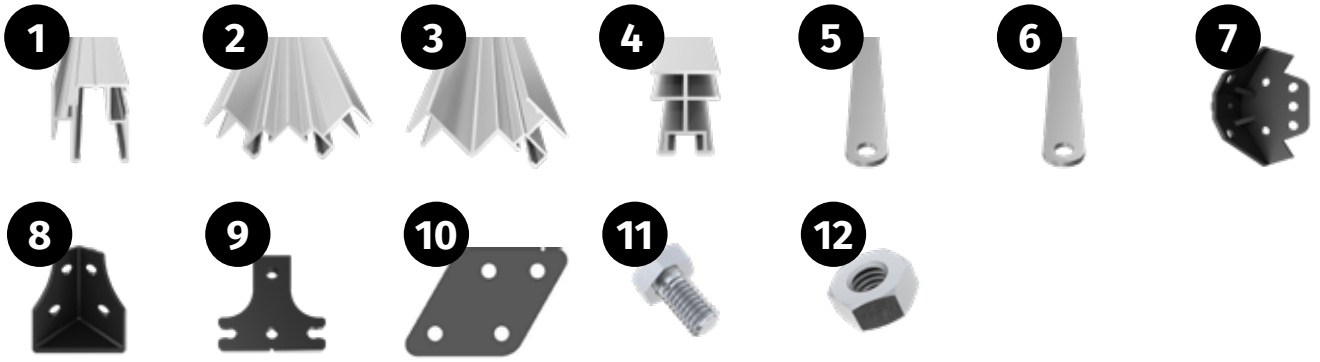

Part	Item number	Designation	Length	Jasmin 2	Jasmin 3	Jasmin 4	Jasmin 5
1	PQS05-1867.1	Soil profile 1867	1867 mm	**1**	**1**	**1**	**1**
2	PQS01-1307.1	Side corner profile 1307	1307 mm	**2**	**2**	**2**	**2**
3	PQS03-1053.1	Roof corner profile 1053	1053 mm	**2**	**2**	**2**	**2**
4	PQS11-1652.1	Brace back wall 1652	1652 mm	**2**	**2**	**2**	**2**
5	1502-1447.1	Wind bracing	1447 mm	**2**	**2**	**2**	**2**
6	1502-0639.1	Wind bracing	639 mm	**3**	**3**	**3**	**3**
7	PQS35	Ridge-rain gutter knot	-	**3**	**3**	**3**	**3**
8	PQS31	Corner knot Floor knot	-	**2**	**2**	**2**	**2**
9	PQS36	T-connector floor	-	**2**	**2**	**2**	**2**
10	NG205	Cross brace knot	-	**2**	**2**	**2**	**2**
11	690509	M6x12 mm screw	-	**28**	**28**	**28**	**28**
12	690547	Nut M6	-	**28**	**28**	**28**	**28**

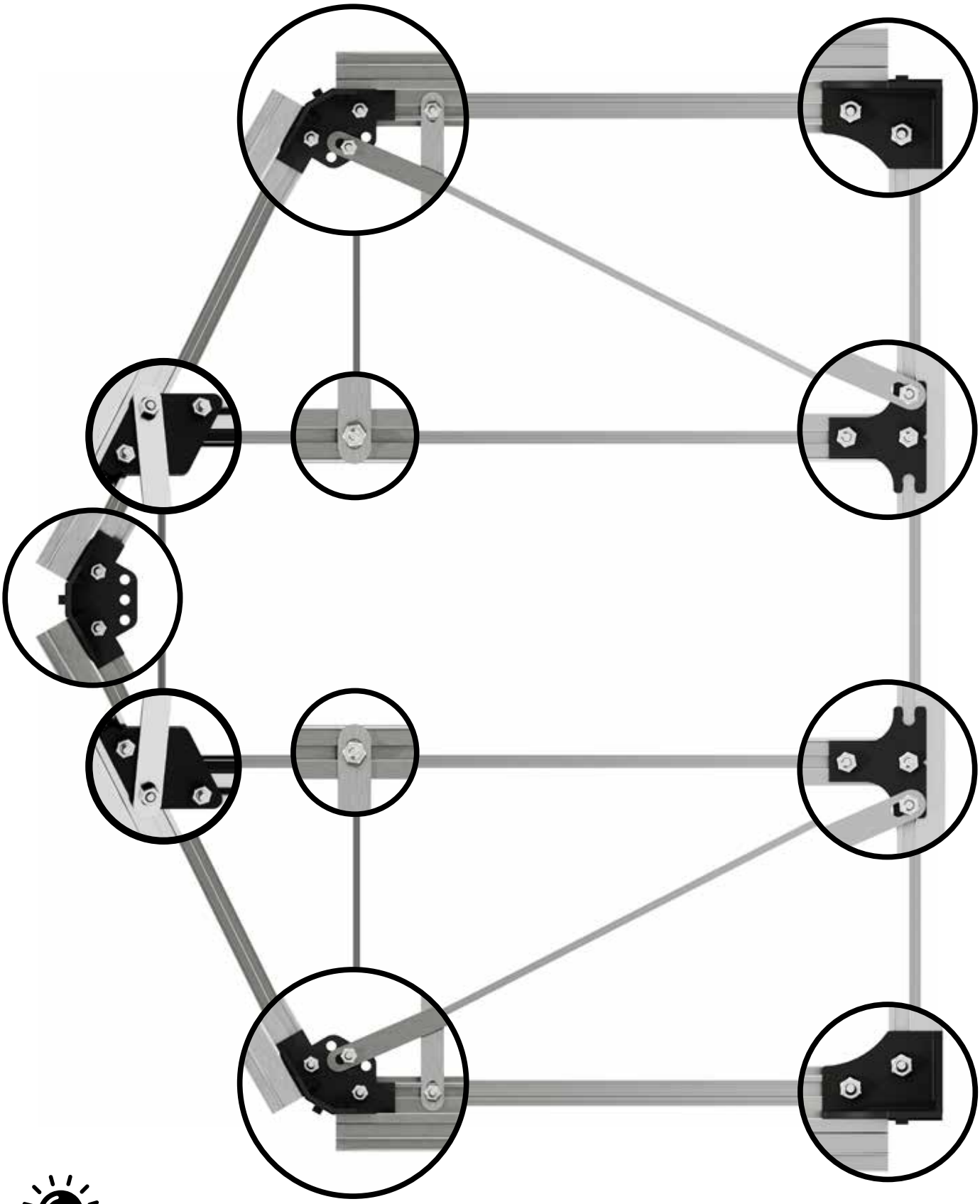

Note

If you have decided to purchase a foundation, the steps in Figures 1a to 1p will change. See page 47!

1a **right**

Take a floor profile 1867 mm, a floor knot, three M6x12 mm screws and an M6 nut.

1b **right**

Insert the three M6x12 mm screws into the screw channel of the floor profile.

1c

Place the floor knot so that an M6x12 screw protrudes through the hole provided. Ensure that the profile butts against the outer limiting lug of the floor knot.

1d **right**

Screw the floor knot firmly to the floor profile using an M6 nut.

1e **left**

For the second side of the floor profile, use a floor knot, three M6x12 mm screws and an M6 nut.

1f **left**

Insert the three M6x12 mm screws into the screw channel of the floor profile.

1g

Place the floor knot so that an M6x12 screw protrudes through the hole provided. Ensure that the profile butts against the outer limiting lug of the floor knot.

1h **left**

Screw the floor knot firmly to the floor profile using an M6 nut.

1i **right**

Take a side corner profile, an M6x12 mm bolt and an M6 nut.

1j **right**

Insert the M6x12 mm screw into the screw channel of the side corner profile.

1k **right**

Place the side corner on the floor profile. Position the side corner so that the M6x12 screw protrudes through the hole provided in the floor knot.

1l **right**

Screw the side corner profile to the floor knot using the M6 nut.

1m **left**

Pick up the second side corner profile, an M6x12 bolt and an M6 nut.

1n **left**

Insert the M6x12 mm screw into the screw channel of the side corner profile.

1o **left**

Place the side corner on the floor profile. Set the
Position the side corner so that the M6x12 screw protrudes through the hole provided in the floor knot.

1p **left**

Screw the side corner profile to the floor knot using the M6 nut.

2a

Take a corner connector (PQS35), the roof corner profile and three M6x12 mm screws and three M6 nuts.

2b

Insert two M6x12 mm screws into the screw channel of the side corner profile and one screw into the screw channel of the roof corner profile.

2c **right**

Position the corner connector (PQS35) so that the two M6x12 screws protrude through the holes provided.

2d **right**

Align the profiles so that they butt firmly against the corner connector. Screw the corner connector firmly to the profiles using two M6 nuts. Secure the remaining M6x12 mm screw with an M6 nut to prevent it from slipping.

2e **left**

Take a corner connector (PQS35), the roof corner profile and three M6x12 mm screws and three M6 nuts.

2f **left**

Insert two M6x12 mm screws into the screw channel of the side corner profile and one screw into the screw channel of the roof corner profile.

2g **left**

Position the corner connector (PQS35) so that the two M6x12 screws protrude through the holes provided.

2h **left**

Align the profiles so that they butt firmly against the corner connector. Screw the corner connector firmly to the profiles using two M6 nuts. Secure the remaining M6x12 mm screw with an M6 nut to prevent it from slipping.

3a

Take a corner connector (PQS35), six M6x12 mm screws and six M6 nuts.

3b

Insert three M6x12 mm screws into the screw channel of the left and right roof corner profiles.

3c

Position the corner connector so that two M6x12 screws protrude through the holes provided.

3d

Align the profiles so that they butt firmly against the corner connector. Screw the corner connector firmly to the profiles using two M6 nuts. Secure the four M6x12 mm screws with M6 nuts to prevent them from slipping.

4a

Take a brace from the back wall, a connector knot (PQS36), an M6x12 mm screw and three M6 nuts.

4b

Slide the two M6x12 screws from the outside to the marking on the floor profile.

4c

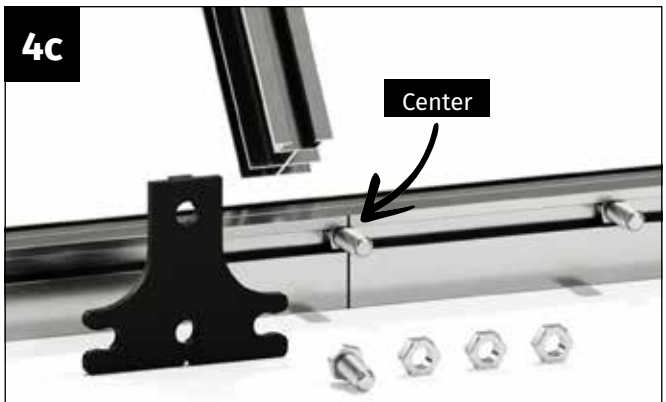

Position an M6x12 screw exactly in the center of the marking on the floor profile.

4d

Place the connector knot (PQS36) so that the M6x12 screw protrudes through the hole provided.

4e

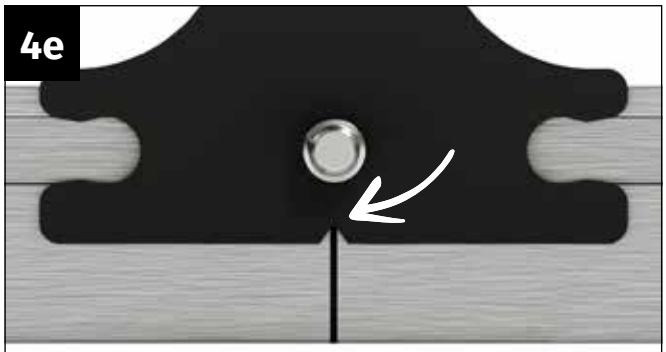

Check again that the connector knot is exactly centered on the marking. The V-punching of the connector knot must correspond exactly with the marking.

4f

Screw the connector knot firmly to the floor profile using an M6 nut.

4g

Insert one M6x12 mm screw into the screw channel of the back wall brace.

4h

Place the back wall brace on the floor profile. Insert the M6x12 screw through the hole in the connector knot.

4i

Screw the back wall brace firmly to the floor profile using an M6 nut.

4j

Clip the remaining M6x12 mm screw into the opening of the connector knot. This requires some force, as the position of the screw is determined by the connector knot. Loosely screw the M6 nut to the M6x12 mm screw.

5a

Switch to the top of the back wall brace. Pick up an M6x12 mm screw.

5b

Insert the M6x12 mm screw into the screw channel of the back wall brace.

5c

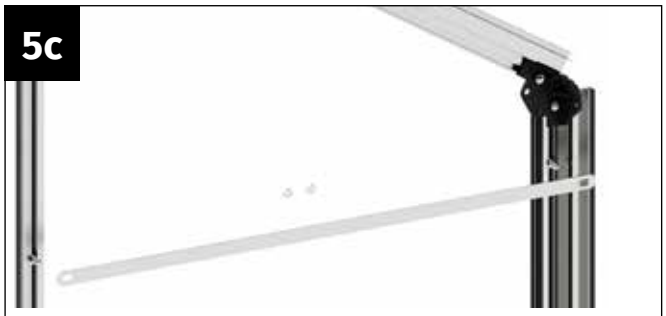

Slide the M6x12 mm screw of the back wall brace downwards in the screw channel. Align the screw of the side corner profile and the screw of the back wall brace exactly horizontally. Take a wind brace and two M6 nuts.

5d

Place the wind brace on the two M6x12 mm screws so that they protrude through the holes in the wind brace.

5e

Align the wind bracing so that it is exactly horizontal and screw it in place with two M6 nuts.

6a

Unscrew the two M6 nuts from the M6x12 mm screws previously inserted in the ridge area and guide the screws towards the upper end of the door entrance profile.

6b

Do not mount upside down!

Take the knot of the cross brace as well as an M6x12 mm bolt and an M6 nut. Insert the screw into the screw channel of the back wall brace.

6c

Place the knot on the cross brace so that the three screws protrude through the holes in the knot.

6d

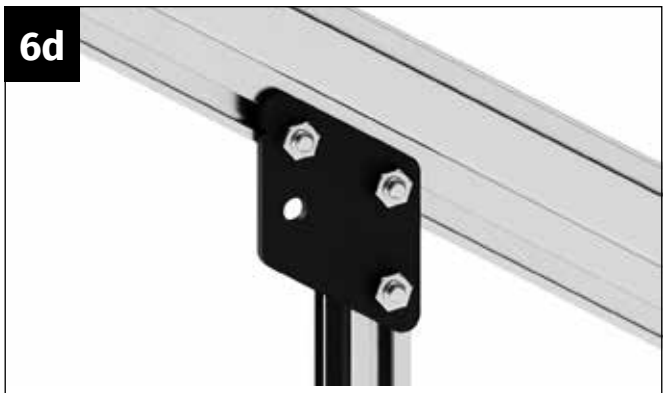

Screw the knot of the cross brace firmly to the roof corner profile and the door entrance profile using M6 nuts.

Repeat

Repeat steps 4 to 6 on the left-hand back wall!

7a

Use the wind bracing with a length of 639 mm

7b

Loosen the nut on the screw connection of the plastic connector knot.

7c

Position the wind bracing so that the M6 x 12 mm screw protrudes through the hole in the wind bracing.

7d

Screw the wind bracing tight with the M6 nut.

Repeat

Repeat step 7 on the left-hand side of the wind bandage!

8a

Use a wind brace, an M6x12 mm bolt and an M6 nut.

8b

Insert the M6x12 mm screw from the outside through the center hole of the corner connector.

8c

Place the wind brace on the M6x12 mm screw so that the screw protrudes through the hole in the wind brace.

8d

Screw the wind bracing to the corner connector using an M6 nut.

8e

Guide the lower part of the wind brace to the connector knot of the back wall brace and remove the M6 nut.

8f

Place the wind brace on the M6x12 mm screw so that the screw protrudes through the hole in the wind brace.

8g

Screw the wind brace to the connector knot using an M6 nut...

Repeat

Repeat step 8 to screw the wind bracing to the second side of the back wall!

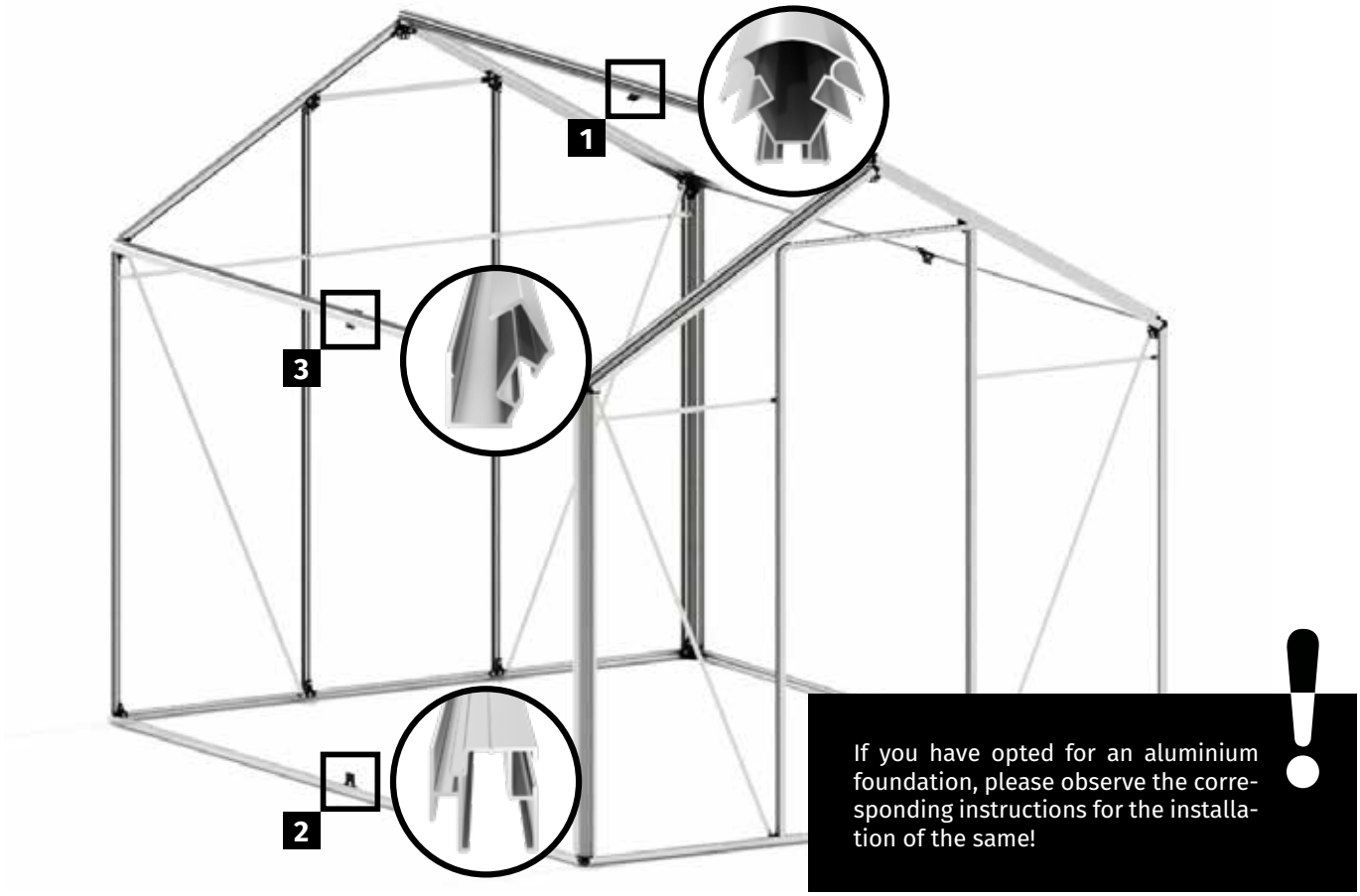

Notes

Connecting the longitudinal parts
The first step is to connect the floor profiles, the guttering and the ridge using the connectors supplied. The floor, floor profiles, rain gutters and ridge must be the same length!

Notice:
In the **Jasmin 2 and Jasmin 3** models, the side floor profiles, the rain gutters and the ridge are continuous and therefore the "connecting the longitudinal parts" step is omitted

If you have purchased the **Jasmin 2 or Jasmin 3** model, scroll forward and continue with the assembly of the longitudinal parts. To do this, turn to page 43.

1. It is best to start with the ridge profile. See Figures 1a to 1e.
2. Continue with the floor profiles. Please refer to figures 2a to 2e

Attention:
If you have opted for an aluminium foundation, please observe the corresponding instructions for its installation!
3. Finally, connect the parts of the rain gutter. Please refer to figures 3a to 3e.

Note for Jasmin 5:
Make sure that the position of the profiles for 3 sections must be in the same place for the floor profiles, the rain gutters and the ridge. We recommend using the longer profiles for 3 sections first.

The easiest way is to lay the floor profiles and rain gutters next to each other and check that the profiles for 3 sections are in the same position before assembly.

Please also note that the floor profiles and rain gutters must be installed mirror-inverted!
It is therefore best to lay the longitudinal profiles correctly right at the start and only then start to assemble and screw them together.

You will need the following for this assembly step:

Part	Item number	Designation	Length	Jasmin 2	Jasmin 3	Jasmin 4	Jasmin 5
1	PQS05-1252.1	Floor profile (2-section)	1252 mm	**-**	**-**	**4**	**2**
2	PQS05-1867.1	Floor profile (3-section)	1867 mm	**-**	**-**	**-**	**2**
3	PQS09-1252.1	Rain gutter (2-section)	1252 mm	**-**	**-**	**4**	**2**
4	PQS09-1867.1	Rain gutter (3- section)	1867 mm	**-**	**-**	**-**	**2**
5	PQS04-1252.1	Ridge (2-section)	1252 mm	**-**	**-**	**4**	**2**
6	PQS04-1867.1	Ridge (3 section)	1867 mm	**-**	**-**	**-**	**2**
7	PQS32	Double connector straight	-	**-**	**-**	**2**	**2**
8	PQS33	Cranked double connector	-	**-**	**-**	**3**	**3**
9	690509	M6x12 mm screw	-	**-**	**-**	**10**	**10**
10	690547	Nut M6	-	**-**	**-**	**10**	**10**

Note

If you have decided to purchase an additional aluminium foundation, the illustrations of the 1st floor will change. Step - Connecting the floor profiles. Please refer to the illustrations "Incl. Foundation".

1a

Pick up the floor profiles, plastic connectors (PQS32) and M6x12 mm screws and M6 nuts.

1b

Insert an M6x12 mm screw into the screw channel of each floor profile.

1c

Bring the two floor profiles together. Place the plastic connector (PQS32) on the floor profiles so that the two M6x12 mm screws protrude through the openings in the plastic connector.

1d

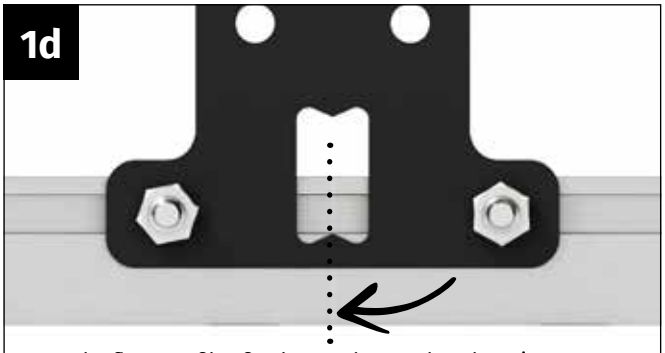

Press the floor profiles firmly together so that there is no gap. Before screwing them together, check that the V-marker on the plastic connector is pointing exactly at the point where the two floor profiles meet!

1e

Screw the plastic connector firmly to the floor profile using two M6 nuts.

Connecting the floor profiles when using an aluminium foundation

In the following pictures we show step 1 if you want to use an aluminium foundation.
When connecting the floor profiles, please ensure that both the floor profiles and the foundation profiles are screwed together with the corresponding connector parts. Press the profiles firmly against each other before screwing them together so that there is no gap!

1a

Incl. Aluminium foun-

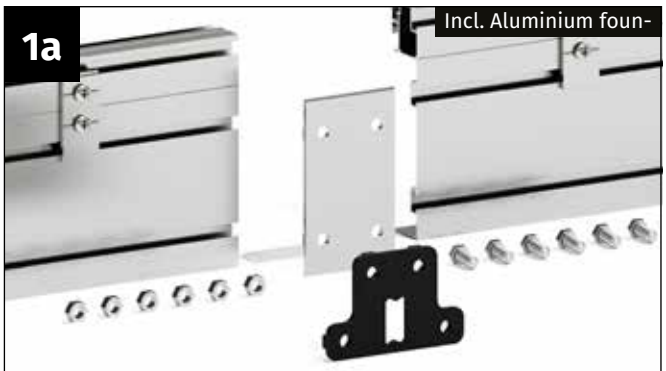

Take a plastic connector for the floor profiles and a connector part for the foundation profiles, plus six M6x12 mm screws and six M6 nuts.

1b

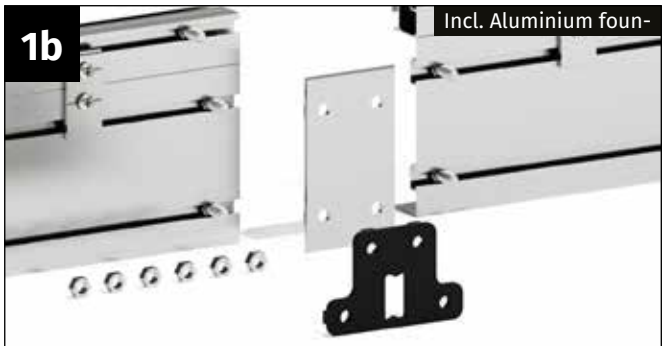

Insert an M6x12 mm screw into the screw channels on the left and right of the greenhouse floor profile. Also insert one screw into each of the screw channels of the foundation profile.

1c

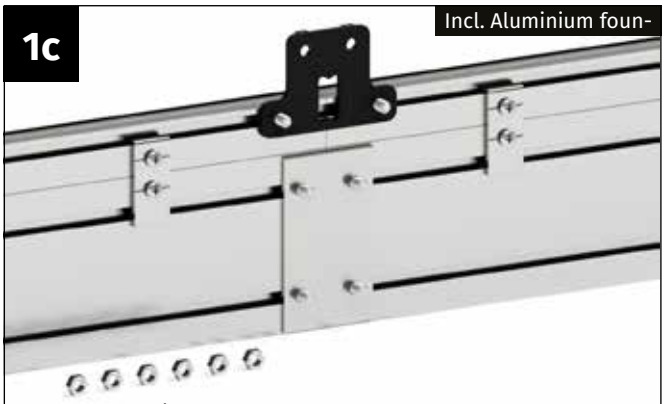

Place the plastic connector of the floor profile and the connector of the foundation profile.

1d

Press the floor and foundation profiles firmly together so that there is no gap. Before screwing them together, check that the V-marker on the plastic connector is pointing exactly at the point where the two floor profiles meet!

1e

Screw the connectors firmly to the floor or foundation profiles using the M6 nuts. Make sure that the ends of the profiles butt up against each other!

2a

Pick up the ridge profiles, plastic connectors (PQS33) and M6x12 mm screws and M6 nuts.

2b

Insert an M6x12 mm screw into the screw channel of each ridge profile.

2c

Bring the two ridge profiles together. Place the plastic connector (PQS33) on the ridge profiles so that the two M6x12 mm screws protrude through the openings in the plastic connector.

2d

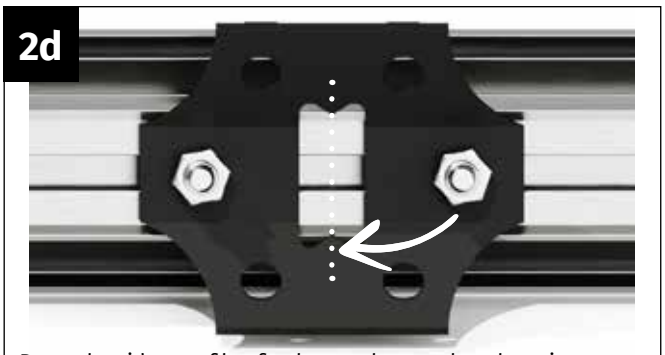

Press the ridge profiles firmly together so that there is no gap. Before screwing them together, check that the V markers on the plastic connector point exactly to the point where the two ridge profiles meet!

2e

Screw the plastic connector firmly to the ridge profile using two M6 nuts.

3a

Pick up the rain gutters, plastic connectors (PQS33) and M6x12 mm screws and M6 nuts.

3b

Insert an M6x12 mm screw into the screw channel of each rain gutter part.

3c

Bring the two rain gutters together. Place the plastic connector (PQS33) on the rain gutters so that the two M6x12 mm screws protrude through the openings in the plastic connector.

3d

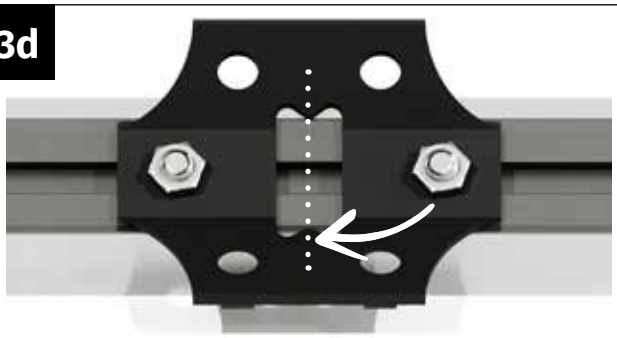

Press the gutter parts firmly together so that there is no gap. Before screwing them together, check that the two V-markers on the plastic connector point exactly to the point where the two rain gutters meet!

3e

Screw the plastic connector firmly to the gutter using two M6 nuts.

Attaching the plastic connectors

The following connector knots are required:

Ridge, length 1252 mm: 1 pc. No. PQS37
Ridge, length 1867 mm: 2 pcs. No. PQS37
Rain gutters, length 1252 mm: 1 pc. No. PQS37
Rain gutters, length 1867 mm: 2 pcs. No. PQS37
Floor profiles, length 1252 mm: 1 pc. No. PQS36
Floor profiles, length 1867 mm: 2 pcs. No. PQS36

1a

For profile length 1252 mm, insert one M6x12 mm screw and for profile length 1867, insert two M6x12 mm screws into the screw channel of the ridge profile.

1b

Position the M6x12 screw exactly in the center of the marking on the ridge profile.

1c

Place the plastic connector (PQS37) on the ridge profile so that theM6x12 mm screws protrude through the opening in the plastic connector.

1d

Before screwing in, check that the two V markers on the plastic connector point exactly to the length mark on the ridge.

1e

Screw the plastic connector firmly to the ridge using an M6 nut.

2a

Insert the required number of M6x12 mm screws into the screw channel of the rainwater gutters (1 screw depending on the length of the profile). or 2 pcs.). Guide the screws to the length markings on the rain gutters.

2b

Position the M6x12 screw exactly in the center of the marking on the rain gutter.

2c

Place the plastic connector (PQS37) on the rain gutter so that the M6x12 mm screw protrudes through the opening in the plastic connector.

2d

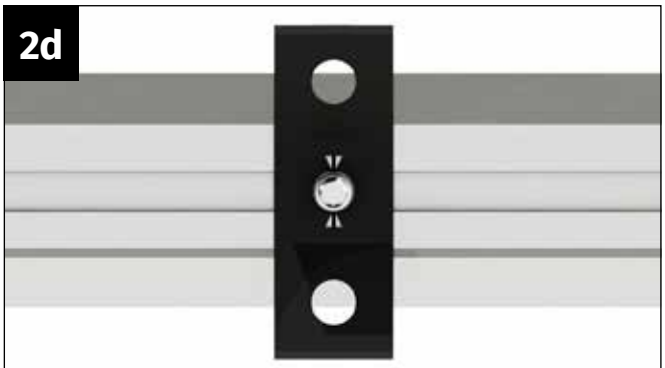

Before screwing in, check that the two V-markers on the plastic connector point exactly to the length mark on the gutter.

2e

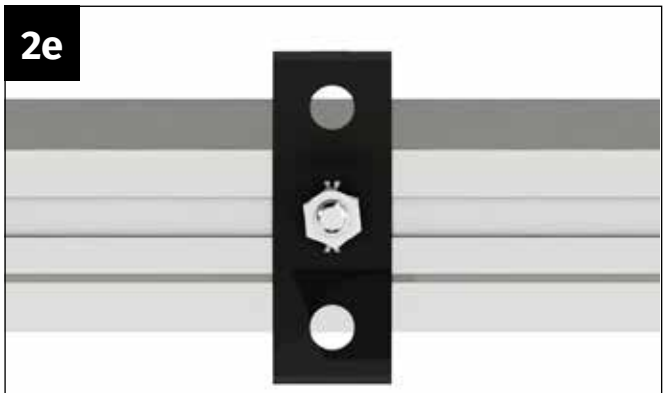

Screw the plastic connector firmly to the gutter using an M6 nut.

3a

Insert the required number of M6x12 mm screws into the screw channel of the floor profile (1 each depending on the length of the profile). or 2 pcs.). Guide the screws to the length markings on the floor profile.

3b

Position the M6x12 screw exactly in the center of the marking on the floor profile.

3c

Place the plastic connector (PQS37) on the floor profile so that the M6x12 mm screws protrude through the opening in the plastic connector.

3d

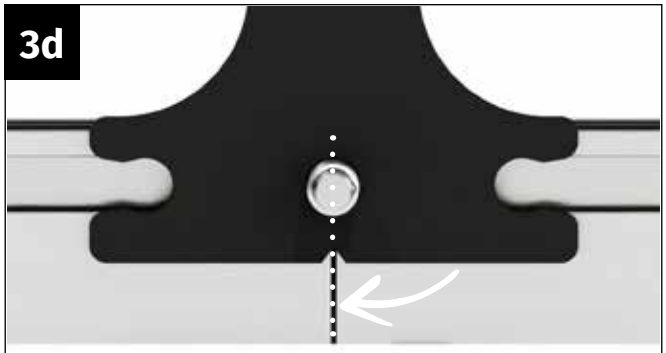

Before screwing in, check that the V-marker on the plastic connector points exactly to the length mark on the floor profile.

3e

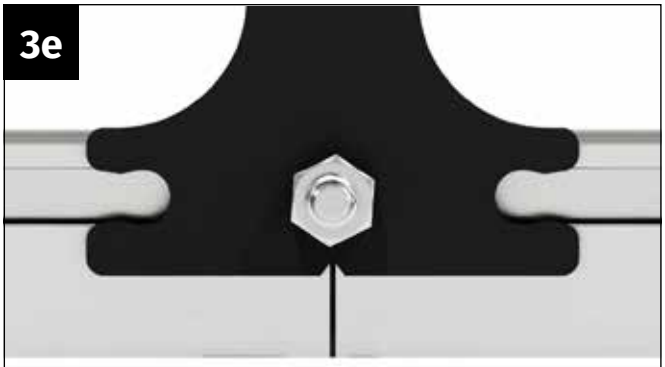

Screw the plastic connector firmly to the floor profile using an M6 nut.

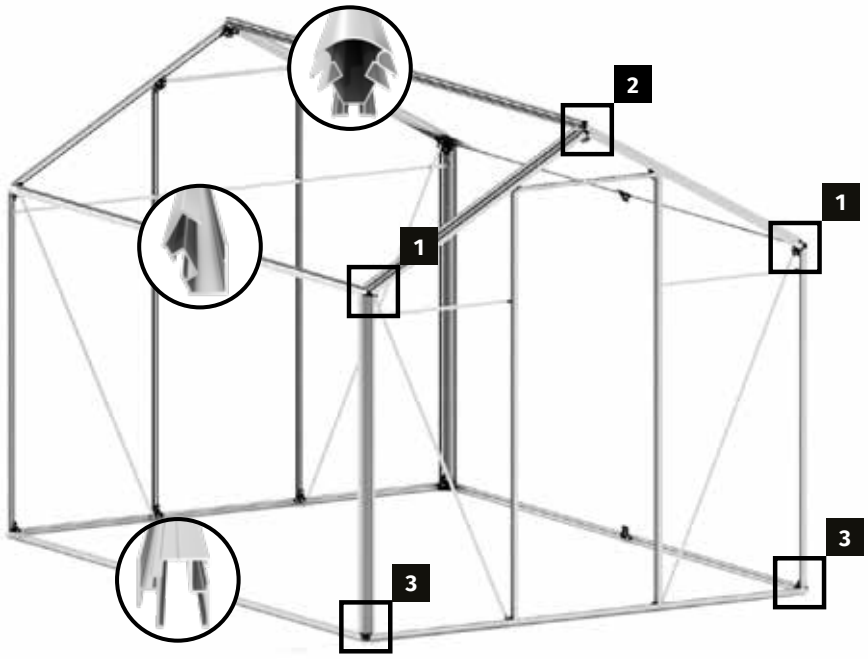

Note

In the next step, the longitudinal parts (floor profiles, the rain gutters and the ridge) are screwed to the prepared front and back wall. This work should be carried out by at least two people, but ideally by three.

Place the long sections on the floor. Set up the front and back wall so that the longitudinal parts lie between them and serve as a distance between the front and back wall.

Start by screwing the rain gutters in place, then insert the ridge profile. Finally, the two floor profiles are screwed to the front and back wall.

You will need the following for this assembly step:

Part	Item number	Designation	Quantity	Jasmin 2	Jasmin 3	Jasmin 4	Jasmin 5
1	-	Floor profile (already prepared)	**2**	1252 mm	1867 mm	2504 mm	3119 mm
2	-	Rain gutter (already prepared)	**2**	1252 mm	1867 mm	2504 mm	3119 mm
3	-	Ridge (already prepared)	**1**	1252 mm	1867 mm	2504 mm	3119 mm
4	690509	M6x12 mm screw	**18**	-	-	-	-
5	690547	Nut M6	**18**	-	-	-	-

Notice:
The screw connection is the same on the front and back wall. First screw the part firmly to the front wall, then to the back wall. Do not fit the next part until both sides have been screwed together!

1a

Pick up the rain gutter, two M6x12 mm screws and an M6 nut.

1b

Important note:
Make sure that the rain gutter is installed correctly! The longer leg with the grooves must face the side wall!

1c

Insert the two M6x12 mm screws into the screw channel of the rain gutter.

1d

Place the rain gutter on the plastic connector so that the screw protrudes through the hole in the plastic connector.

1e

Push the rain gutter outwards until it hits the stop of the plastic connector. Screw the rain gutter tight with an M6 nut.

2a

Pick up the ridge profile, an M6x12 mm screw and an M6 nut.

2b

Insert the M6x12 mm screw into the screw channel of the ridge profile.

2c

Place the ridge profile on the plastic connector so that the screw protrudes through the hole in the plastic connector.

2d

Push the ridge profile outwards until it hits the stop of the plastic connector. Screw the ridge profile tightly with an M6 nut.

Note

If you have decided to purchase an additional aluminium foundation, the illustrations of the 1st floor will change. Step - Connecting the floor profiles. Please refer to the illustrations "Incl. Foundation".

3a

Take the floor profile and two M6x12 mm screws, M6 nuts and the plastic floor knot.

3b

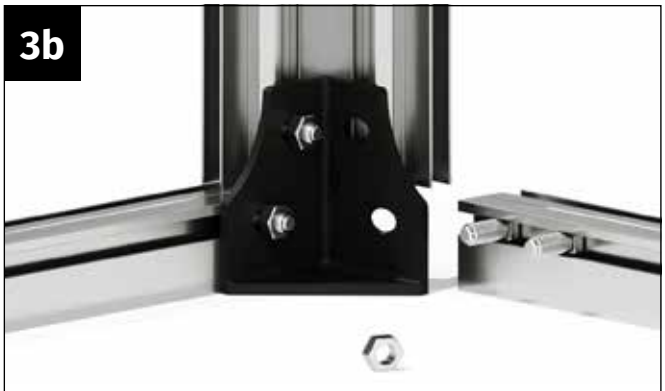

Insert the M6x12 mm screws into the screw channel of the floor profile.

3c

Place the floor profile on the plastic connector so that the screw protrudes through the hole in the plastic connector.

3d

Push the floor profile outwards until it hits the stop of the plastic connector.
Screw the floor profile tightly with an M6 nut.

Screwing the floor profiles to the front and back wall incl. foundation

First, the floor profile is screwed to the floor knot. Before tightening the nut, push the floor profile outwards until it hits the stop of the floor knot.
Then align the screws of the foundation profiles, place the corner knot of the foundation and screw it firmly to the foundation profiles.

3a Incl. Aluminium foun-

Take five M6x12 mm screws and M6 nuts.

3b Incl. Aluminium foun-

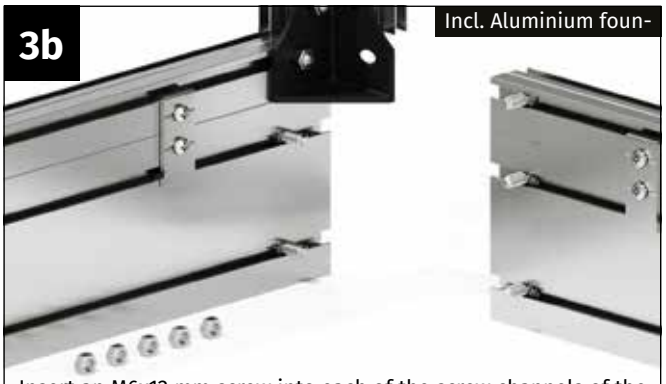

Insert an M6x12 mm screw into each of the screw channels of the foundation profiles and into the screw channel of the floor profile.

3c Incl. Aluminium foun-

Place the floor profile on the plastic connector so that the screw protrudes through the hole in the plastic connector.

3d Incl. Aluminium foun-

Push the floor profile outwards until it hits the stop of the plastic connector. Then secure the floor profile firmly with an M6 nut.

3e Incl. Aluminium foun-

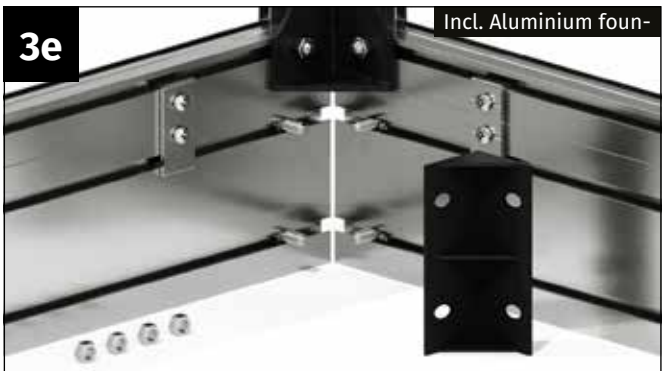

Take the corner knot of the foundation and align the screws in the screw channels of the foundation profiles.

3f Incl. Aluminium foun-

Place the corner knot of the foundation on the four screws and adjust it so that it is positioned exactly in the corner of the foundation profiles.

3g Incl. Aluminium foun-

Screw the corner knot of the foundation with four M6 nuts.

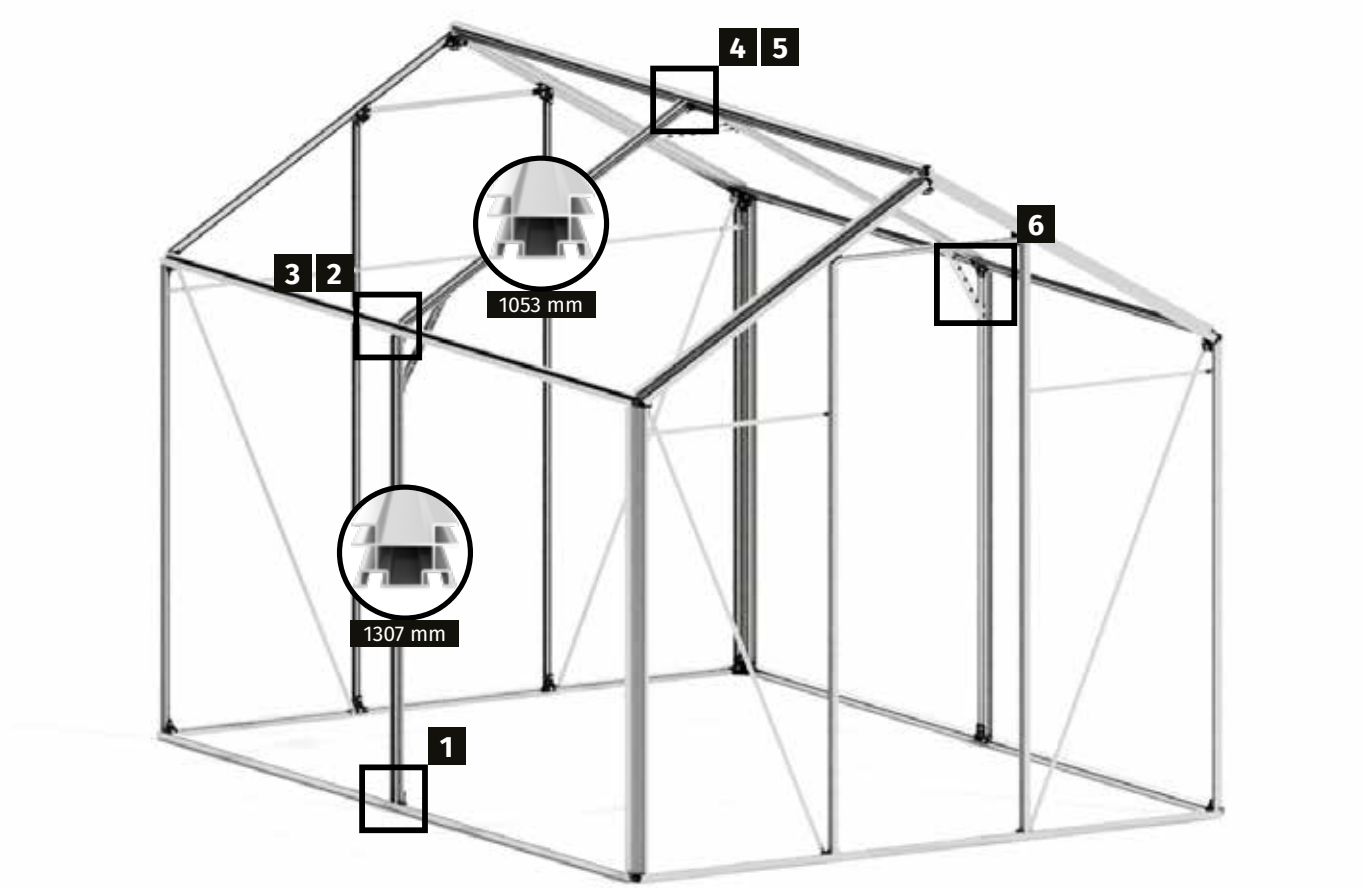

You will need the following for this assembly step:

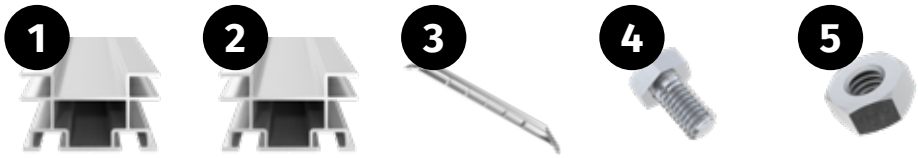

Part	Item number	Designation	Length	Jasmin 2	Jasmin 3	Jasmin 4	Jasmin 5
1	PQS08-1307.1	Coupling profile side panel	1307 mm	-	-	**2**	**2**
2	PQS08-1053.1	Coupling profile roof	1053 mm	-	-	**2**	**2**
3	126-0025.1	Reinforcement of ridge/rain	25 mm	-	-	**3**	**3**
4	690509	M6x12 mm screw	-	-	-	**22**	**22**
5	690547	Nut M6	-	-	-	**22**	**22**

Notice:
In the next construction phase, the coupling braces are mounted on the side walls and roof. **If you have purchased a Jasmin 2 or Jasmin 3 model, this assembly step is not necessary, as there is no division of the longitudinal profiles!**

Repeat

Repeat the assembly step for the other two coupling profiles!

1a

Pick up the coupling profile of the side wall as well as two M6x12 mm screws and two M6 nuts.

1b

Insert one M6x12 mm screw into the screw channel of the coupling profile.

1c

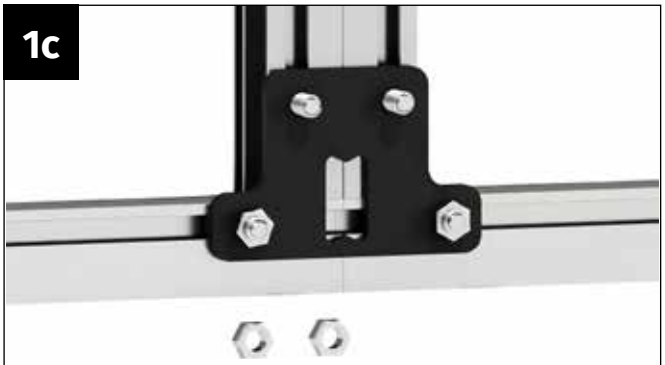

Place the coupling profile on the floor profile so that the two M6x12 mm screws protrude through the holes in the connector knot.

1d

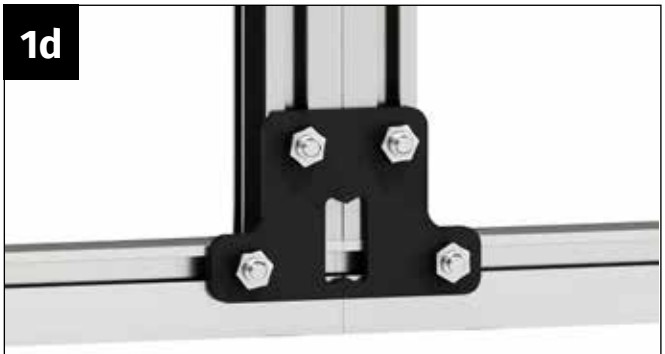

Screw the coupling profile firmly to the connector knot using two M6 nuts.

2a

ATTENTION: You will need three M6x12 mm screws and three M6 nuts on the top of the coupling profile.

2b

Insert two M6x12 mm screws into the left-hand screw channel and one screw into the right-hand screw channel of the coupling

2c

Insert the coupling profile so that the two M6x12 mm screws protrude through the holes in the connector knot.

2d

Screw the coupling profile firmly to the connector knot using two M6 nuts. Secure the remaining screw of the left screw channel with a nut to prevent it from slipping.

3a

ATTENTION: You will need three M6x12 mm screws and three M6 nuts on the underside of the coupling profile.

3b

Insert two M6x12 mm screws into the left-hand screw channel and one screw into the right-hand screw channel of the coupling

3c

Screw the coupling profile firmly to the connector knot using two M6 nuts. Secure the remaining screw of the left screw channel with a nut to prevent it from slipping.

4a

ATTENTION: You will need three M6x12 mm screws and three M6 nuts on the top of the coupling profile.

4b

Insert two M6x12 mm screws into the left-hand screw channel and one screw into the right-hand screw channel of the coupling

4c

Screw the coupling profile firmly to the ridge using two M6 nuts. Secure the remaining screw of the left screw channel with an M6 nut to prevent it from slipping.

Note

To further improve the roof loads of our greenhouses, we have provided the areas where the longitudinal profiles (ridge profile and rain gutter) are divided with additional reinforcements. Please fit one stiffener to the division at the ridge and one to each of the two rain gutters. **Tip:** To achieve the best stability, we recommend spanning the ridge slightly outwards with an auxiliary support before installing the reinforcements. When installing the reinforcements on the rain gutters, please ensure that the rain gutters are aligned exactly straight and do not bend outwards under any circumstances! **It is best not to remove the ridge support until after the house has been glazed!**

5a

Support the ridge with an auxiliary support as described. Pick up a "Reinforcement ridge + gutter" .

5b

Loosen the M6 nuts from the two M6x12 mm screws that were also inserted in the coupling profile.

5c

Align the M6x12 mm screws so that the stiffener can be fitted and put it in place.

5d

Align the bracing neatly and screw it tight with M6 nuts.

6a

Pick up a "Reinforcement ridge + gutter" .

6b

Loosen the M6 nuts from the two M6x12 screws that were also inserted in the coupling profile.

6c

Align the M6x12 mm screws so that the stiffener can be fitted and put it in place.

6d

Align the bracing neatly and screw it tight with M6 nuts.

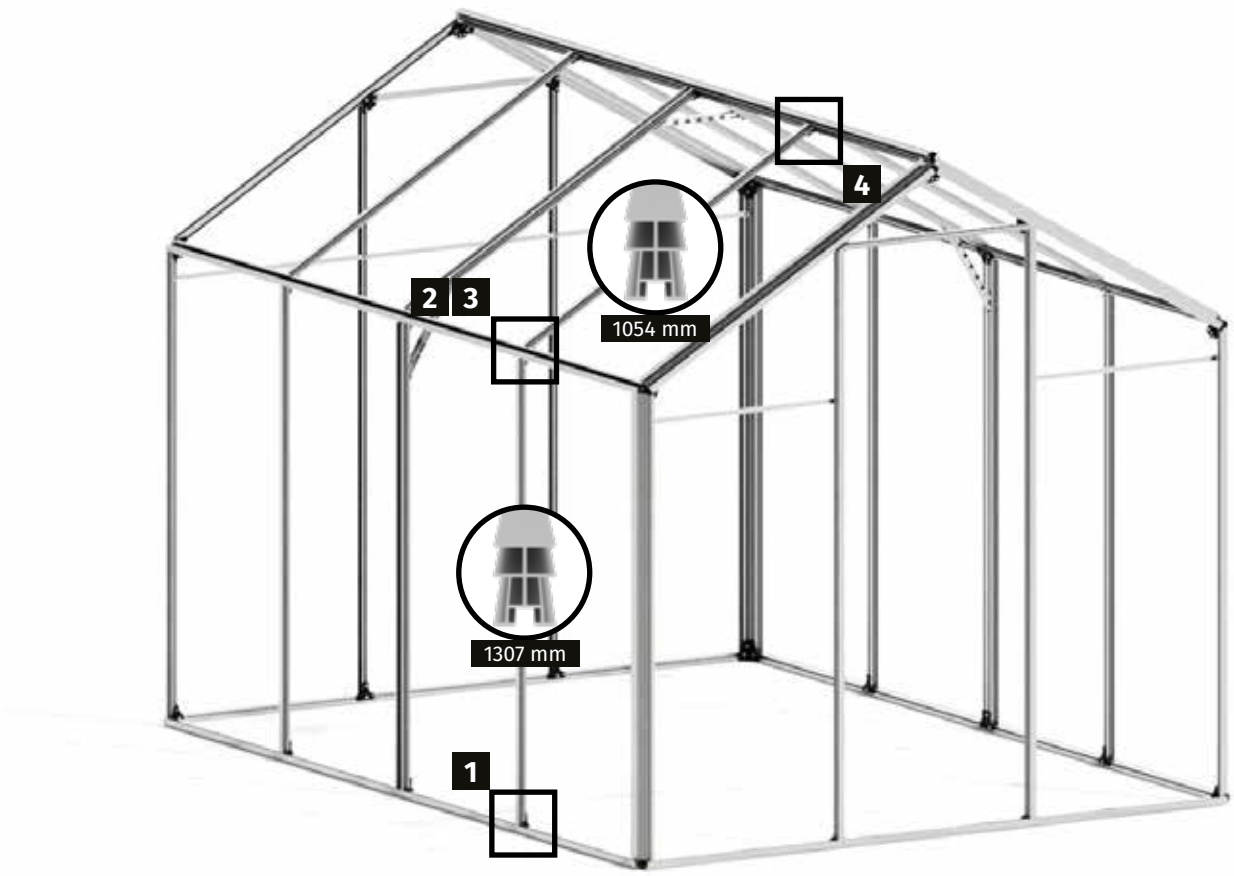

You will need the following for this assembly step:

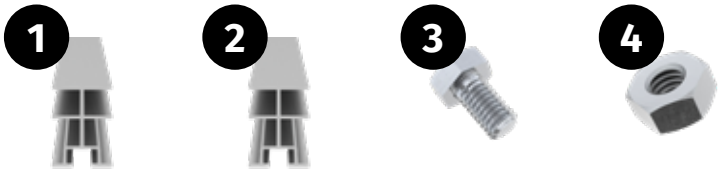

Part	Item number	Designation	Length	Jasmin 2	Jasmin 3	Jasmin 4	Jasmin 5
1	PQS11-1307.1	Side wall brace	1307 mm	**2**	**4**	**4**	**6**
2	PQS11-1053.1	Roof brace	1054 mm	**2**	**4**	**4**	**6**
3	690509	M6x12 mm screw	-	**8**	**16**	**16**	**24**
4	690547	Nut M6	-	**8**	**16**	**16**	**24**

1a

Take a brace from the side walls, an M6x12 mm screw and an M6 nut.

1b

Insert the M6x12 mm screw on the underside into the screw channel of the brace.

1c

Place the brace of the side walls on the floor profile. Position the M6x12 mm screw in the hole in the plastic connector.

1d

Screw the brace firmly to the plastic connector using an M6 nut.

2a

Take an M6x12 mm bolt and an M6 nut.

2b

Insert an M6x12 mm screw at the top into the screw channel of the brace.

2c

Place the brace of the side walls on the plastic connector. Position the M6x12 mm screw in the hole in the plastic connector.

2d

Screw the brace firmly to the plastic connector using an M6 nut.

3a

Pick up a roof brace, an M6x12 mm bolt and an M6 nut.

3b

Insert the M6x12 mm screw on the underside into the screw channel of the roof brace.

3c

Place the roof brace on the plastic connector. Position the M6x12 mm screw in the hole in the plastic connector.

3d

Screw the brace firmly to the plastic connector using an M6 nut.

4a

Take an M6x12 mm bolt and an M6 nut. Insert the M6x12 mm screw at the top into the screw channel of the roof brace.

4b

Place the roof brace on the plastic connector. Position the M6x12 mm screw in the hole in the plastic connector.

4c

Screw the brace firmly to the plastic connector using an M6 nut.

Repeat

Repeat step 7 for all other braces of the side walls and roof!

8. Assembly of the wind bracing on the side walls and roof

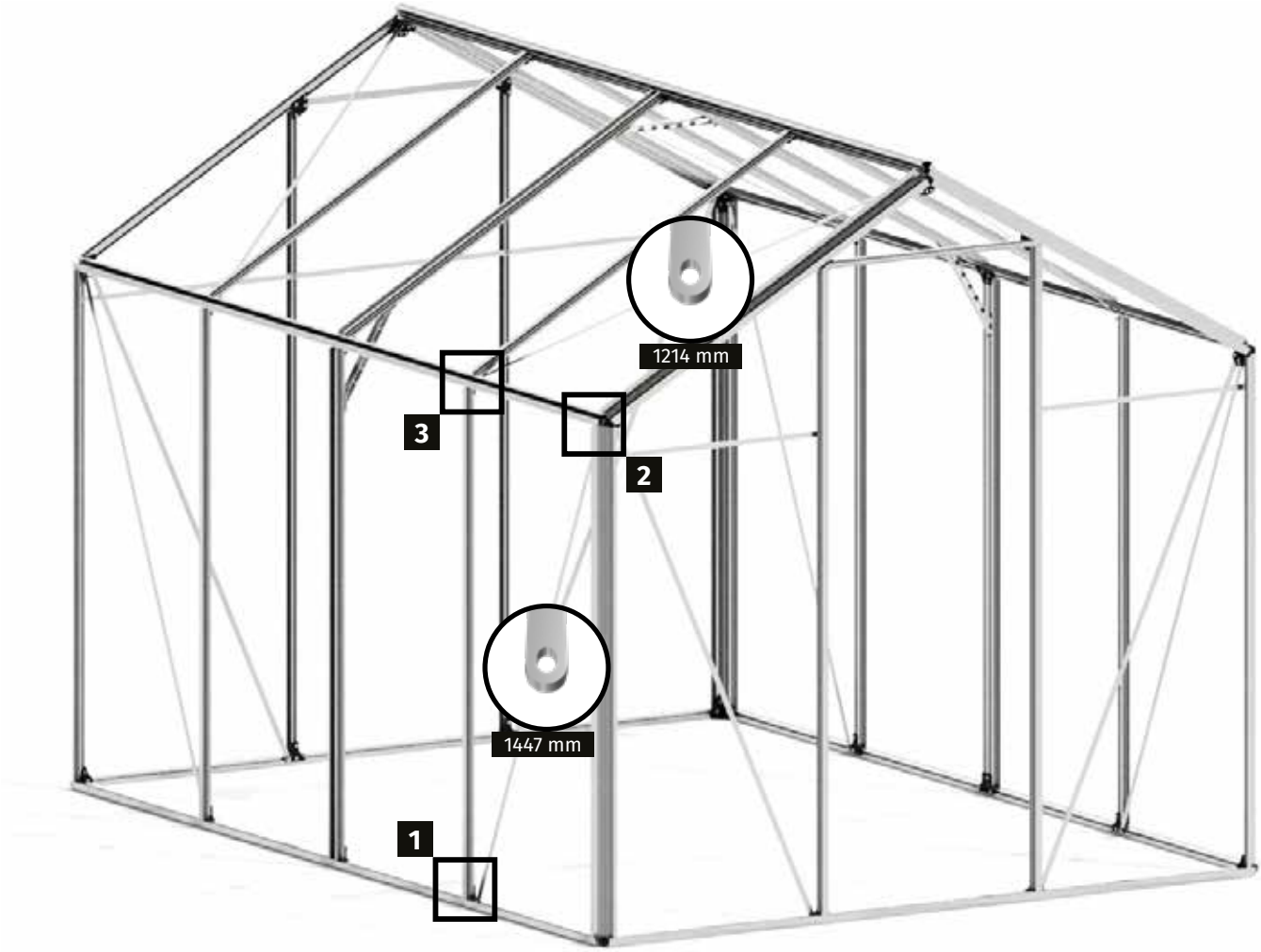

You will need the following for this assembly step:

Part	Item number	Designation	Length	Jasmin 2	Jasmin 3	Jasmin 4	Jasmin 5
1	1502-1447.1	Wind bracing side wall	1447 mm	**4**	**4**	**4**	**4**
2	1502-1214.1	Wind bracing roof	1214 mm	**-**	**-**	**4**	**4**
3	690509	M6x12 mm screw	-	**4**	**4**	**8**	**8**
4	690547	Nut M6	-	**8**	**8**	**12**	**12**

Note

No wind bracing is fitted to the roof of the **Jasmin 2 and Jasmin 3** models.

To the **Jasmin 4 and Jasmin 5**models:
If you do not want the roof window to be crossed by a wind on the inside, we recommend that you do not install the window on one of the outer roof bays!

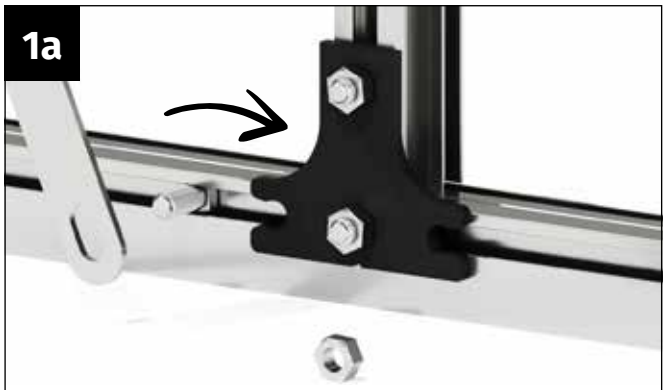

Insert the M6x12 mm screw from the end of the floor profile to the connector knot.

Clip the M6x12 mm screw into the opening of the connector knot. This requires some force, as the position of the screw is determined by the connector knot.

Position the wind bracing so that the M6x12 screw protrudes through the slotted hole in the wind bracing.

Screw the wind bracing firmly to the floor profile using an M6 nut.

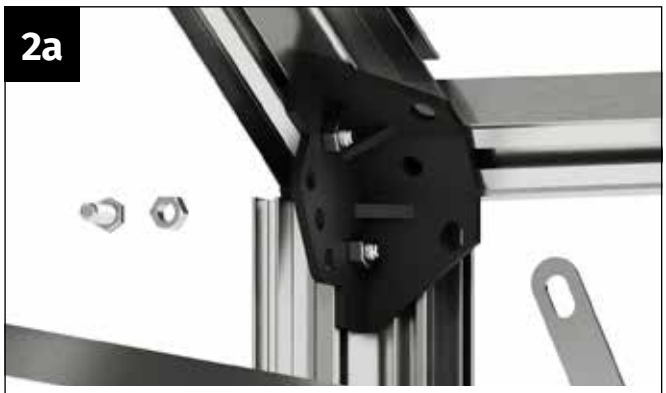

Take an M6x12 mm bolt and an M6 nut.

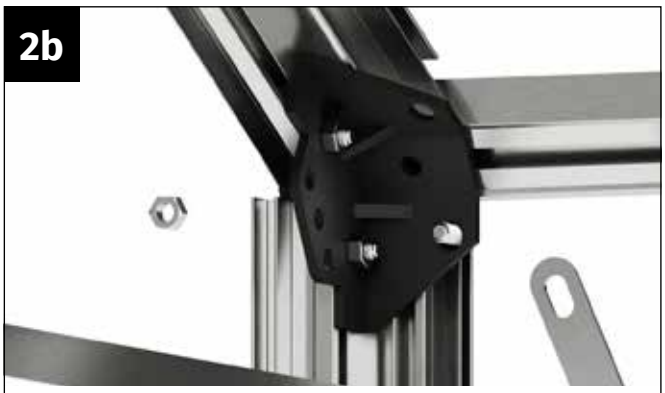

Insert an M6x12 mm screw from the outside through the hole punched in the connector knot.

Position the wind bracing so that the M6x12 screw protrudes through the slotted hole in the wind bracing.

Screw the wind bracing firmly to the connector knot using an M6 nut.

3a

Pick up a wind bracing from the roof.

3b

Loosen the nut with which the roof brace was screwed to the connector knot.

3c

Position the wind bracing so that the M6x12 screw protrudes through the slotted hole in the wind bracing.

3d

Screw the wind brace firmly to the roof brace using the M6 nut.

4a

Take an M6x12 mm bolt and an M6 nut.

4b

Insert the M6x12 mm screw from the outside through the hole in the corner connector.

4c

Position the wind bracing so that the M6x12 screw protrudes through the slotted hole in the wind bracing.

4d

Screw the wind bracing firmly to the corner connector using the M6 nut.

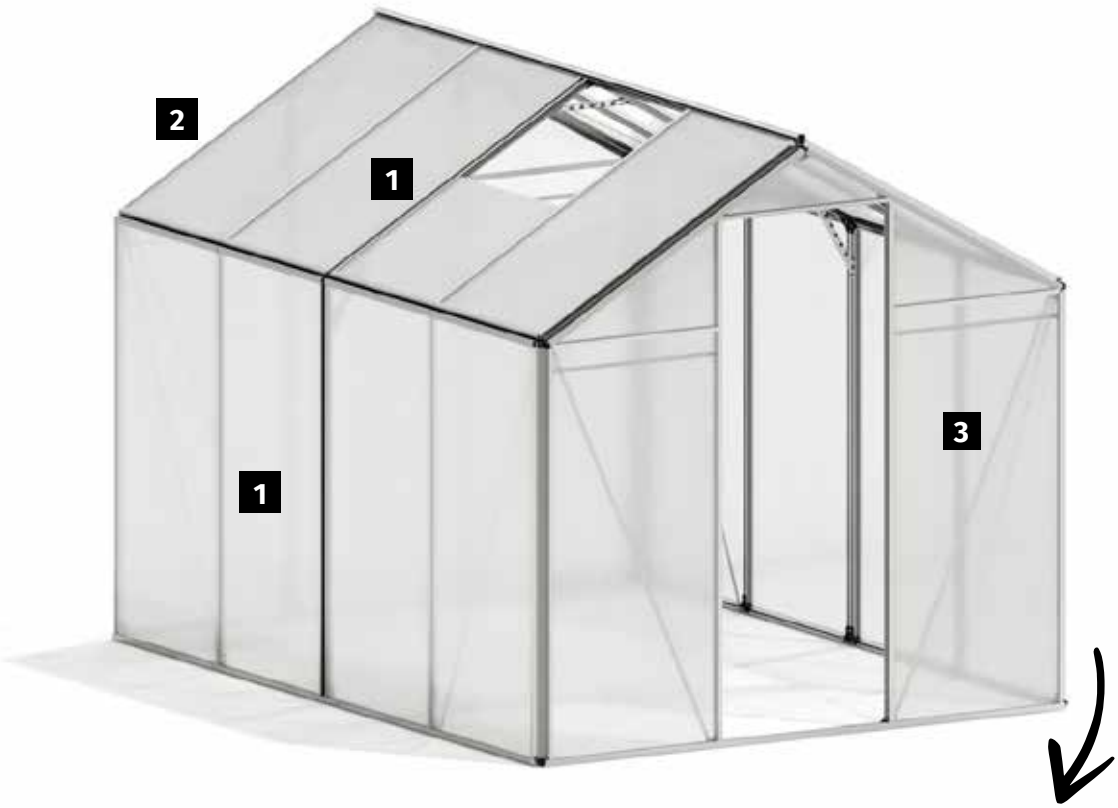

Side walls and roof

Back wall

Front wall

Note

In the following steps, the twin-wall sheets of your greenhouse are installed in the Prepared aluminium frame inserted.

BEFORE ASSEMBLING:
Please note that the twin-wall sheets supplied have an inner and outer side. The outside is UV-resistant and marked with the word "**Outside**".

Alternatively, a film can also be applied to the sheets - the side with the film is the outside.

Take a side wall web plate and insert it into the front section of the side wall. **It may be necessary to loosen the wind bracing again on the inside**to be able to align the greenhouse exactly plumb.

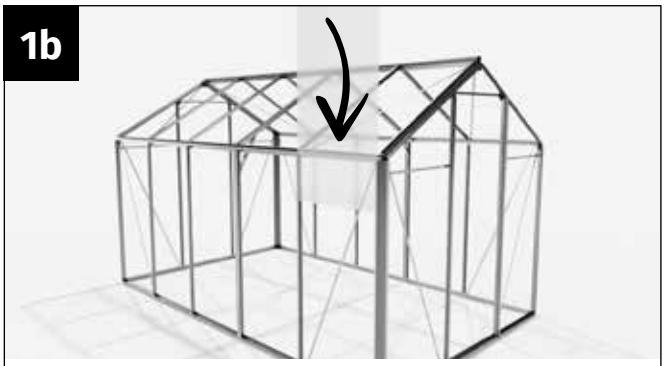

Insert the twin-wall sheets from above in front of the rain gutter into the shaped "U" of the side corner profile and the side wall brace.

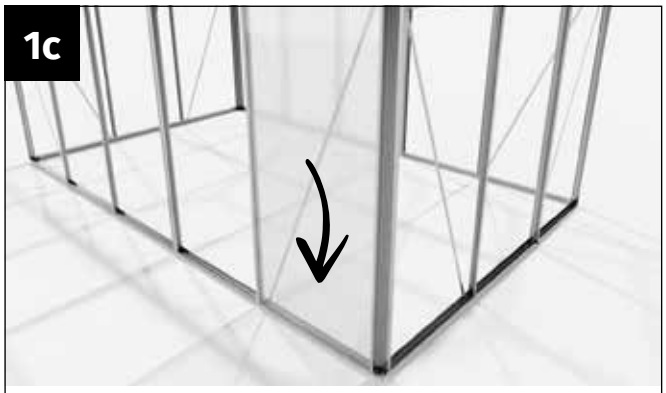

Press the twin-wall sheets firmly downwards so that the sheet is pushed into the groove of the floor profile.

Detail: Twin-wall sheets in the

Glaze the next section of the side walls with another twin-wall sheet.

Take a glazing clip and cut it to the correct length if necessary. Use a fine-toothed saw for this.

Clip the glazing bead onto the vertical leg of the gutter.

Make sure that it is clipped in securely over the entire length.

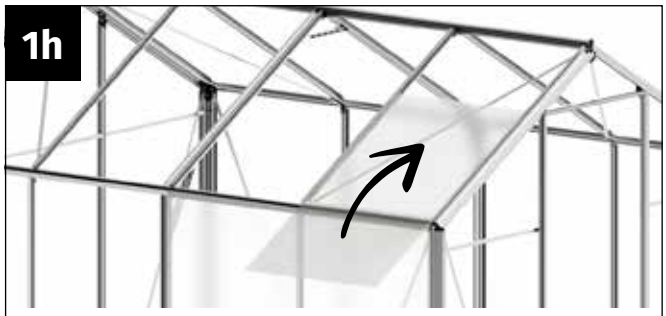

Insert the twin-wall sheets from below at an angle into the shaped "U" of the roof corner profile and the roof brace. **It may be necessary to loosen the wind bracing again on the inside**to be able to align the greenhouse precisely.

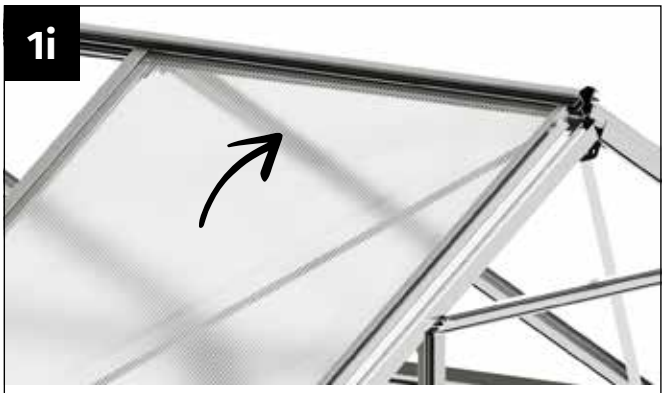

Press the twin-wall sheets upwards so that they protrude slightly into the shaped "U" of the ridge.

Glaze the next section of the side walls with another twin-wall sheet. Take a glazing clip and cut it to the correct length if necessary. Use a fine-toothed saw for this.

Pull the roof panel down so that it rests approximately halfway on the upper leg of the gutter. Clip the glazing bead onto the upper leg of the rain gutter.

Make sure that it is clipped in securely over the entire length.

Repeat

Finish glazing the side walls and the roof in the same way.
Note twin-wall sheets roof:
When glazing the roof surfaces, you should define in advance where you want to install the window. The window is only glazed half-high in advance. We recommend installing the window openings on the side sheltered from the wind, wherever possible.

Important note

After closing the glazing, don't forget to screw the wind bracing tight again if necessary!

In the second step, the back wall is glazed.

2a

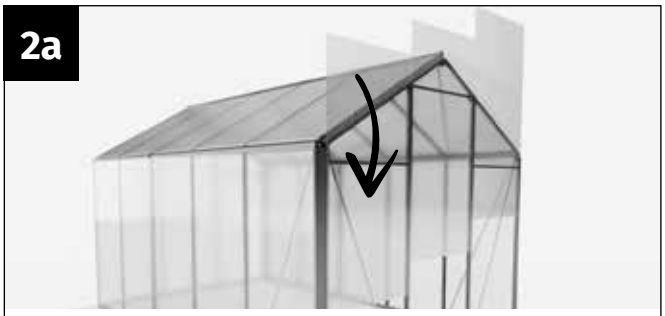

Insert the twin-wall sheets from above into the shaped "U" of the side corner profiles and the back wall braces. **It may be necessary to loosen the wind bracing again on the inside**to be able to align the greenhouse exactly plumb.

2b

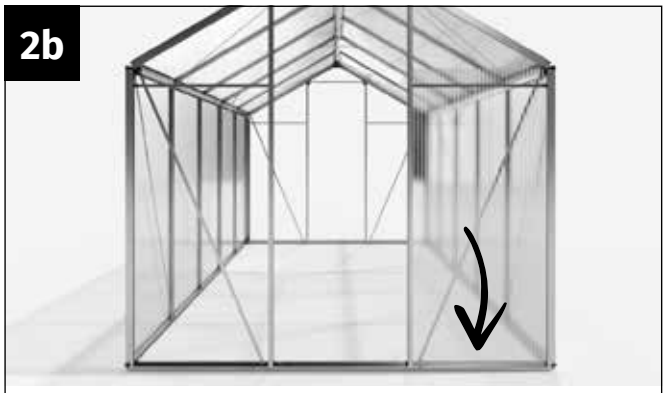

Press the twin-wall sheets firmly downwards so that the sheet is pushed into the groove of the floor profile.

2c

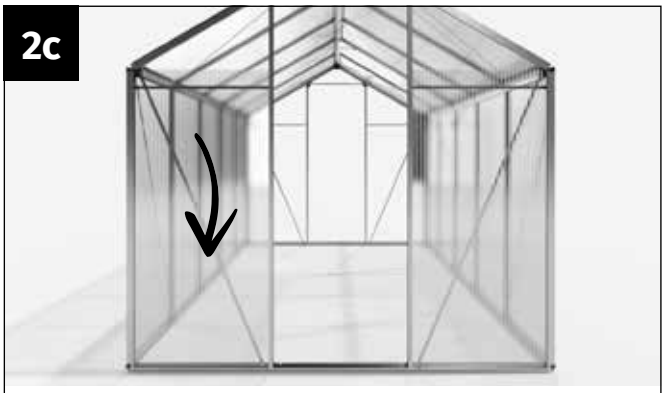

Insert another twin-wall sheet from above into the "U" formed in each of the side corner profiles and the back wall braces.

2d

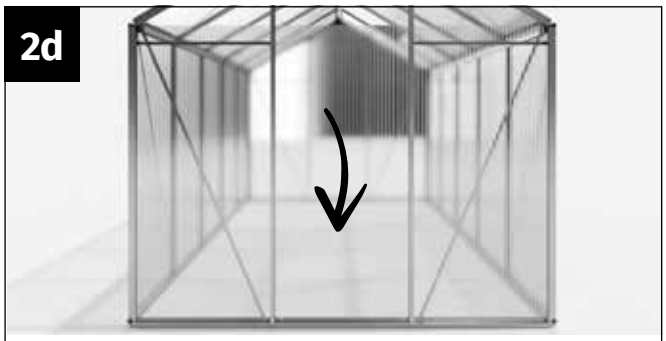

Insert the third twin-wall sheets from above into the "U" formed in the side corner profiles and the back wall braces.
Press the three twin-wall sheets down firmly so that the sheets are pushed into the groove of the floor profile.

Detail: Twin-wall sheets in the

2e

Take three H-profiles.

2f

Place an H-profile on each of the three twin-wall sheets of the back wall. **See also the detailed picture of how to attach the H-profiles!**

2g

Take the smaller, rectangular sheet for the back wall.

2h

Guide the twin-wall sheets from above in the middle section into the shaped "U" of the back wall braces.

2i

Pick up an H-profile.

2j

Place an H-profile on the twin-wall sheets of the back wall.

2k

Guide the triangular twin-wall sheets from above into the sections of the back wall that are still free.

2l

Take two plastic clips and cut them to the length of the roof corner profile.

2m

Place the clips on the roof corner profile. Make sure that they are clipped in securely along their entire length.

3a

In the third step, the front wall is glazed.

3b

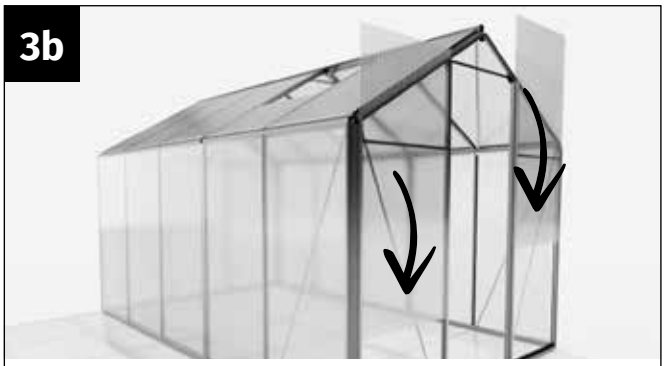

Pick up the two twin-wall sheets of the front wall and slide them into the grooves of the side corner profile and the door entrance profile from above

3c

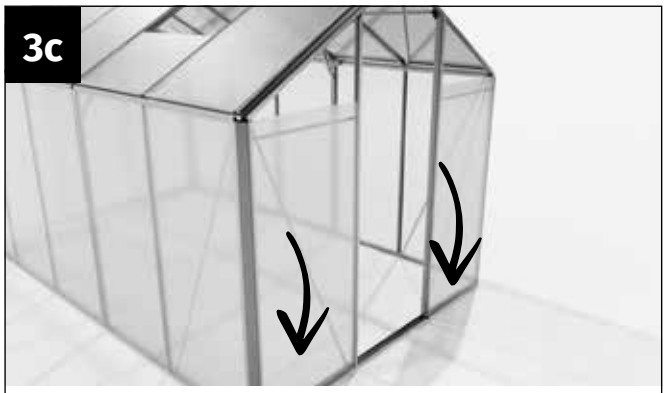

Press the twin-wall sheets firmly downwards so that the sheet is pushed into the groove of the floor profile.

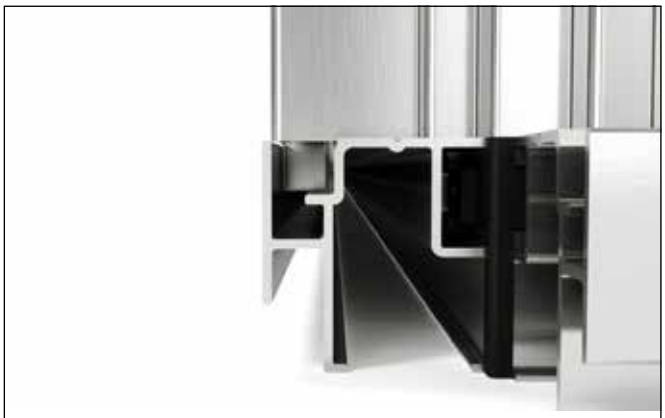

Detail: Twin-wall sheets in the

3d

Take two H-profiles.

3e

Place an H-profile on each of the two twin-wall sheets of the front wall. **See also the above detail on attaching the H-profiles!**

3f

Pick up the two triangular sheets for the front wall.

3g

Place the sheets on the H-profiles.

3h

Pick up the triangular gable sheet.

3i

Place the triangular gable sheets on the cross brace.

3j

Detail: Attached gable triangular panel

3k

Take two plastic clips and cut them to the length of the roof corner profile.

3l

Place the clips on the roof corner profile. Make sure that they are clipped in securely along their entire length.

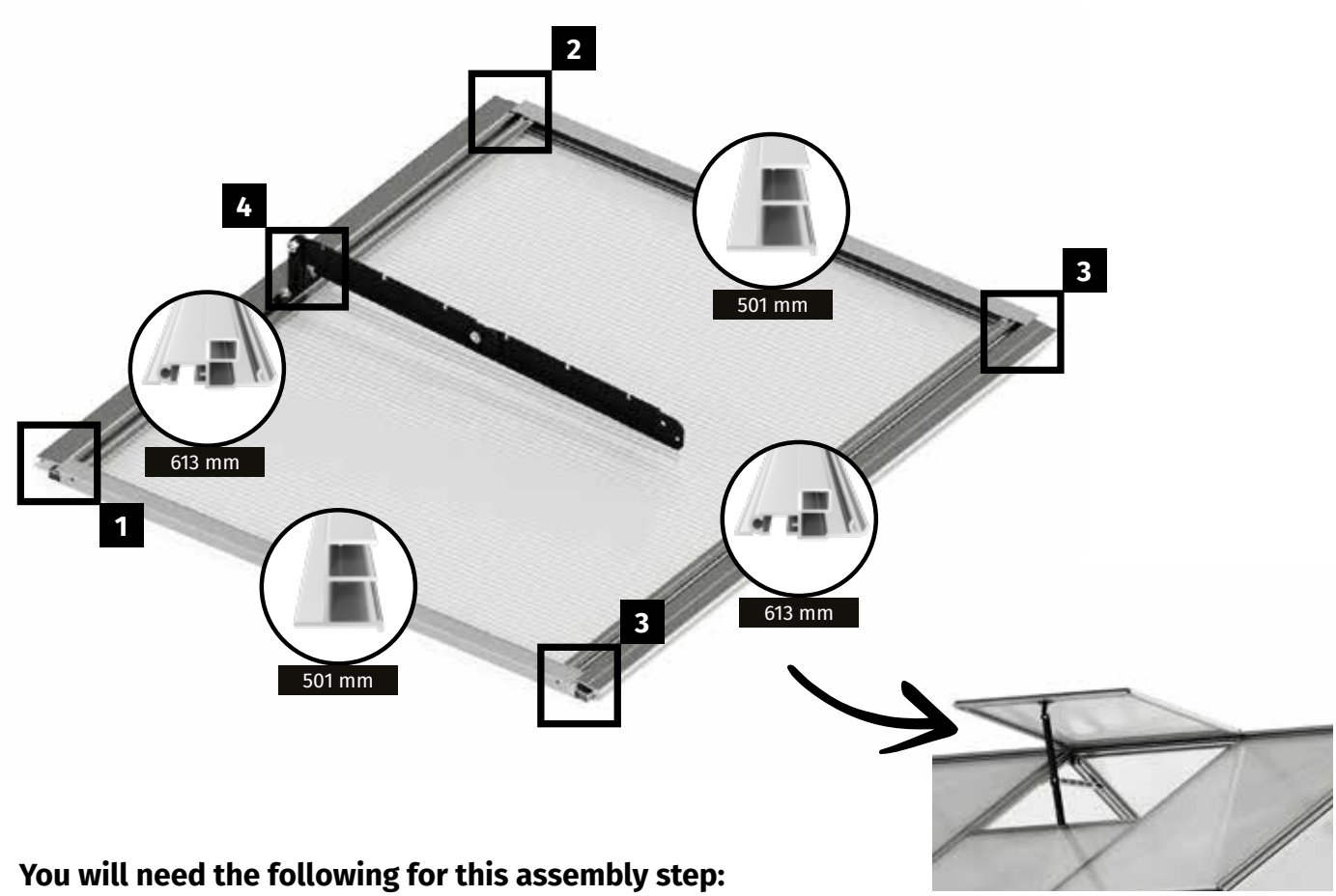

You will need the following for this assembly step:

Part	Item number	Designation	Length	Jasmin 2	Jasmin 3	Jasmin 4	Jasmin 5
1	PQS06-613.1	Window hinge profile	622 mm	**2**	**2**	**2**	**2**
2	PQS07-501.1	Lateral window profile	505 mm	**2**	**2**	**2**	**2**
3	PQS18-593.1	Window stop	593mm	**1**	**1**	**1**	**1**
4	665958	Hobby window display	-	**1**	**1**	**1**	**1**
5	PQS40	L-connector window	-	**1**	**1**	**1**	**1**
6	PQS38	Straight connector knot	-	**1**	**2**	**2**	**2**
7	664753	Sheet metal screws 4.2x22 mm	-	**4**	**4**	**4**	**4**
8	690509	M6x12 mm screw	-	**3**	**3**	**3**	**3**
9	690547	M6x16 mm screw	-	**1**	**1**	**1**	**1**
10	690547	Nut M6	-	**6**	**6**	**6**	**6**
11	690547	Self-locking nut	-	**1**	**1**	**1**	**1**
12	690622	Truss-head screw	-	**2**	**2**	**2**	**2**
13	521/610/6	Window panel 521x610 mm	-	**1**	**1**	**1**	**1**

Assembling window stop

In the following construction phase, the window stop is mounted on the roof bays intended for the windows.

An M6/12 mm Truss-head screw (no. 690622) is used to mount the window stop profile to the roof brace!

Take two straight connector knots, two M6x12 screws, two Truss-head screws and four nuts.

Insert an M6x12 mm screw into the screw channel on each side of the stop profile. Insert one Truss-head screw into each screw channel of the roof brace.

Insert the window stop profile and press it down so that it presses firmly against the web panel.

Screw the plastic connector tightly with M6 nuts.
Make sure that the Truss-head screw is wedged in the screw channel of the roof brace!

Assembling window stop outer roof element

If you want to install the window on the outer roof elements, please use the L-connector PQS40 instead of a connector knot for fixing!

Note

The window is assembled in the following construction phase.
The M6/12 mm screws shown in Figure 1a are only required once and are therefore only inserted into the screw channel on one side.

Important note

After assembly, slide the window from the end of the ridge profile to the desired position.

1a

Take a hinge profile, a window side profile, two M6x12 mm screws and a 4.2x22 mm self-tapping screw.

1b

Insert the two M6x12 mm screws into the screw channel of the hinge profile.

1c

Insert the lateral . Window profile onto the hinge profile.

1d

Screw the two parts together using the 4.2x22 mm self-tapping screw.

2a

Attach the second side window profile to the second side of the hinge profile and screw this in place with a 4.2x22 mm self-tapping screw.

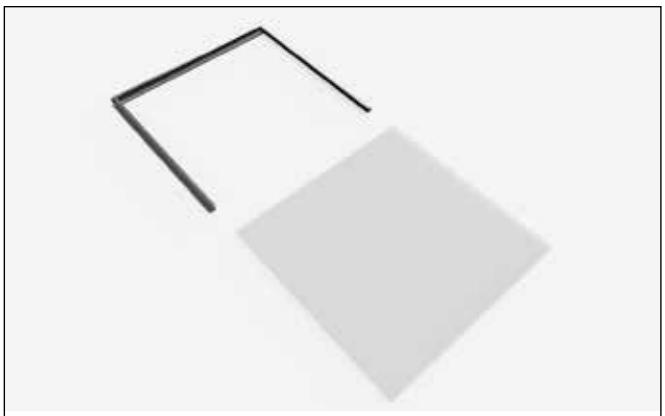

Pick up the twin-wall sheet for the skylight.

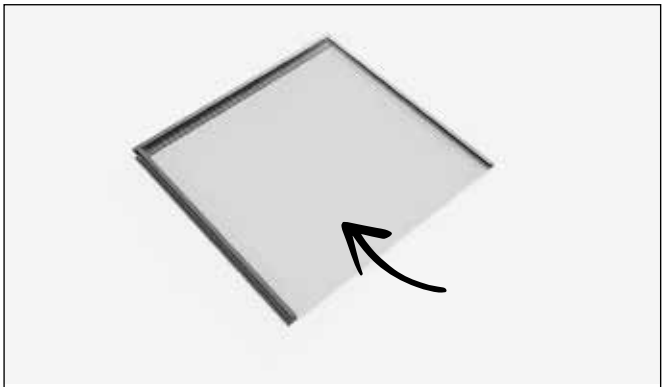

Guide the twin-wall sheet into the prepared frame.
Please pay attention to the outside!

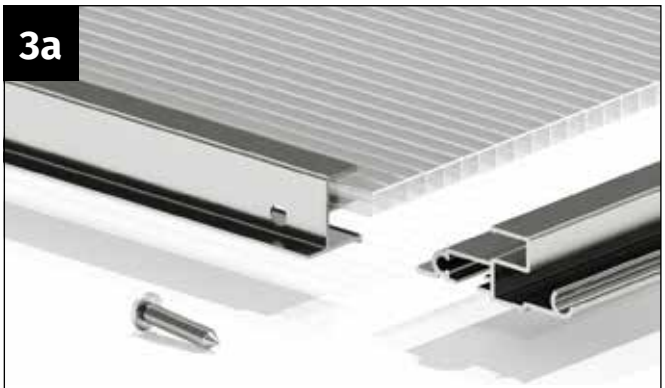

Take the second hinge profile and two 4.2x22 mm sheet metal screws.

Attach the hinge profile to the side window profiles.

Screw both sides together with a 4.2x22 mm self-tapping screw.

Installing window displays

Connect the two individual parts using an M6x12 mm bolt and an M6 nut. The two hinge legs are screwed together with an M6x16 mm screw and an M6 self-locking nut.
The self-locking nut M6 is tightened so firmly that the legs can only be moved with a little force.

Automatic window opener

The installation of an automatic window opener is recommended as a useful accessory. The exhibitor included in the scope of delivery is simply exchanged for the automatic opener. **Important:** In winter, the piston of the automatic window opener must be protected from frost. It is best to replace it with the supplied manual window display!

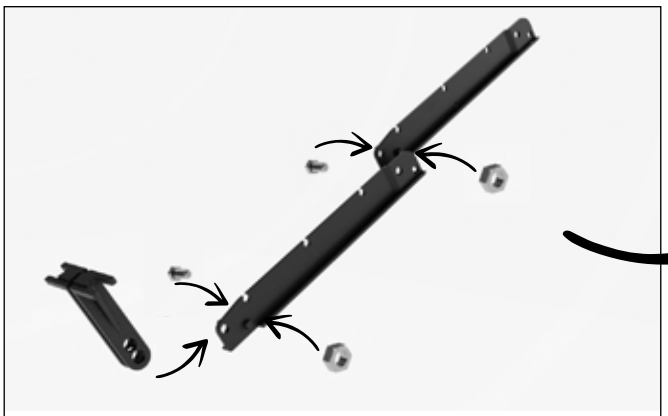

Overview of the assembly of the window display

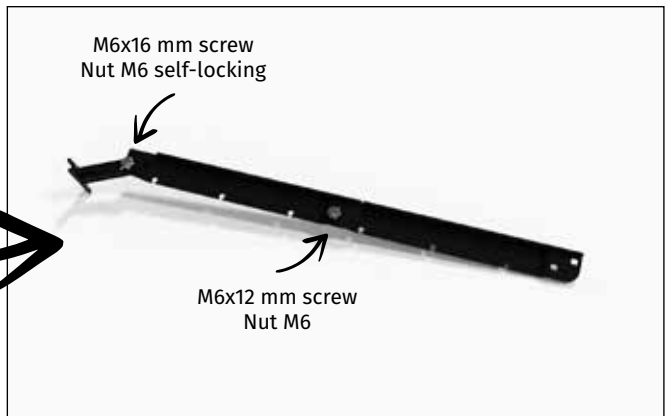

4a

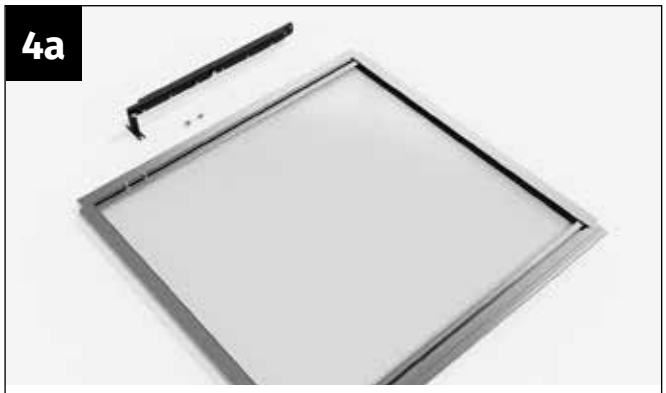

Pick up the prepared window stand and two M6 nuts.

4b

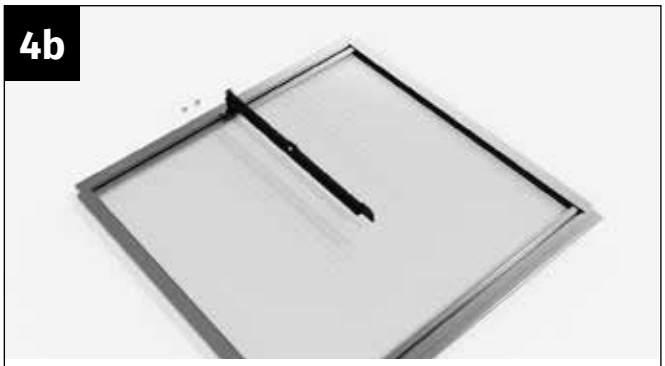

Place the window stay exactly in the centre of the hinge profile. Push one of the previously inserted M6x12 mm screws into the recess of the stand on each side.

4c

Screw the stand to the hinge profile using two M6 nuts.

Insert the window sash into the ridge profile. We recommend applying a little oil **(not supplied)** to the hinge cone of the window sash.

Slide the window sash to the window opening left out when glazing the roof area.

To open the window, the window stay is clipped onto the lower stop profile in the desired position with the corresponding notch (no counterpart on aluminium rail).

To close the window, the opener is angled by 90 degrees.

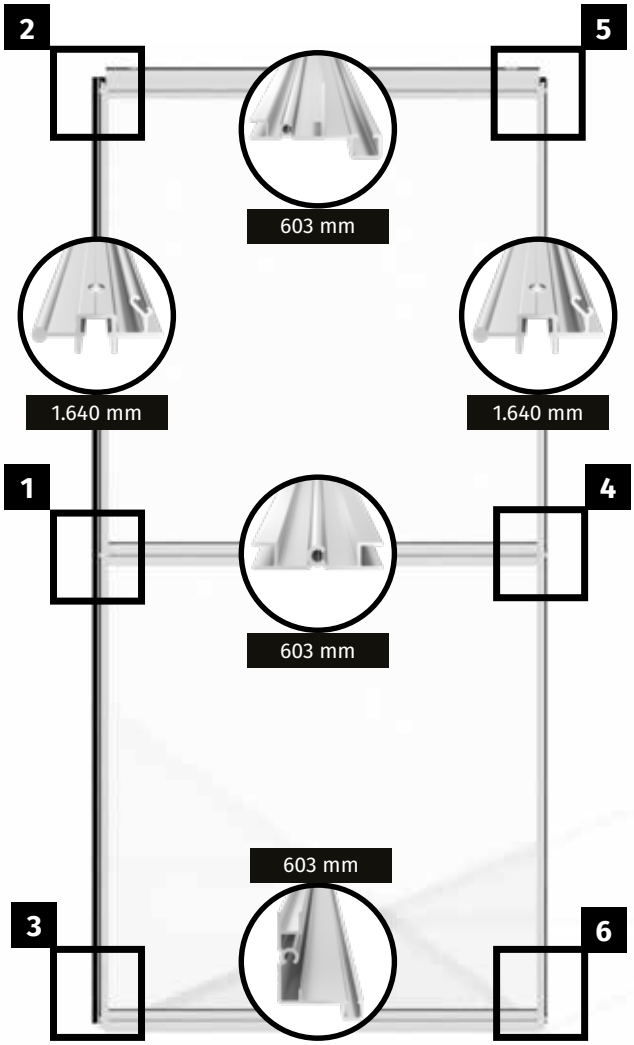

You will need the following for this assembly step

Part	Item number	Designation	Length	Jasmin 2	Jasmin 3	Jasmin 4	Jasmin 5
1	20-1705.1	Door side profile	1640 mm	**4**	**4**	**4**	**4**
2	11-1128.1	Door rail	1255 mm	**2**	**2**	**2**	**2**
3	17-0522.1	Top door profile	603 mm	**2**	**2**	**2**	**2**
4	16-0522.1	Center door profile	603 mm	**2**	**2**	**2**	**2**
5	18-0522.1	Bottom door profile	603 mm	**2**	**2**	**2**	**2**
6	1502-0299.1	Door rail support	344 mm	**2**	**2**	**2**	**2**
7	CT510 GAR3440	Hobby door seal	3440 mm	**2**	**2**	**2**	**2**
8	664555	Axle bolt	-	**4**	**4**	**4**	**4**
9	NG209	Door roller	-	**4**	**4**	**4**	**4**
10	NG201	Door rail protection	-	**2**	**2**	**2**	**2**
11	NG201L	Rain drain - left	-	**1**	**1**	**1**	**1**
12	NG201R	Rain drain - right	-	**1**	**1**	**1**	**1**
13	664753	Sheet metal screws 4.2x22 mm	-	**12**	**12**	**12**	**12**
14	690509	M6x12 mm screw	-	**2**	**2**	**2**	**2**
15	690547	Nut M6	-	**6**	**6**	**6**	**6**
16	781/610/6	Wall panel door 781x610 mm	-	**2**	**2**	**2**	**2**

1a

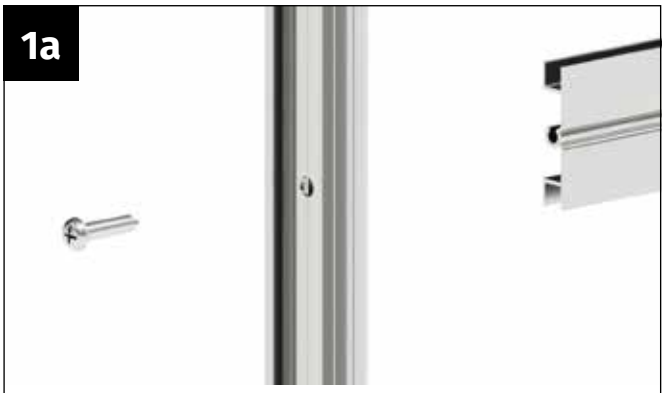

Take the side of the door profile, the door mullion and a 4.2x22 mm sheet metal screw.

1b

Position the door mullion laterally on the door profile so that the punched middle hole is exactly above the screw cone of the door mullion.

1c

Screw the side door profile firmly to the door mullion using the 4.2x22 mm sheet metal screws.

2a

Pick up the door roller profile, an axle bolt, a door roller and an M6 nut.

2b

Insert the nut into the screw channel of the door roller profile. Insert the axle bolt into the door roller. Screw the axle bolt to the nut. **We recommend positioning the door roller about 30 mm from the end of the door roller profile and not overtightening it (it must be able to turn)**. Repeat the process on the second side of the door roller profile.

2c

Pick up the prepared door roller profile and a 4.2x22 mm self-tapping screw for assembling on the side door profile.

2d

Position the door roller profile on the side door profile so that the upper punched hole is exactly above the screw cone of the door roller profile.

2e

Screw the door roller profile firmly to the side door profile using the 4.2x22 mm self-tapping screw.

3a

Remove the door profile at the bottom and a self-tapping screw 4.2x22 mm for assembling on the side door profile.

3b

Position the lower door roller profile on the side door profile so that the punched hole is exactly above the screw cone of the lower door roller profile.

3c

Screw the bottom door roller profile firmly to the side door profile using the self-tapping screw 4.2x22.

Pick up the two twin-wall sheets of the door.
Please pay attention to the outside!

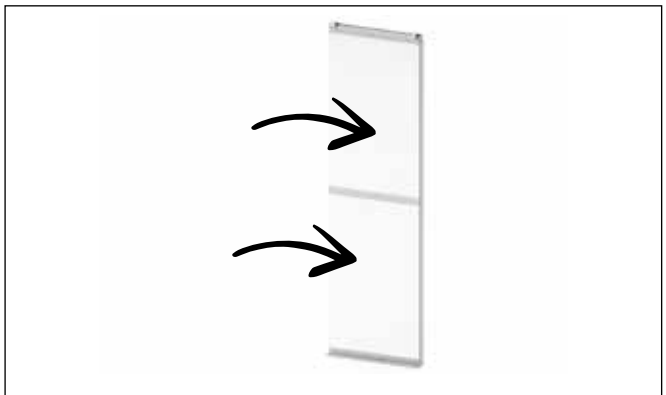

Slide the two door sheets into the pre-screwed door profiles. It is best to lay the door flat on the floor.

4a

Pick up the second side door profile and place it next to the prepared door leaf.

4b

Position the side door profile so that the punched out center hole is exactly above the screw cone of the door mullion.

4c

Screw the side door profile firmly to the door mullion using the 4.2x22 mm sheet metal screws.

5a

Use a 4.2x22 mm self-tapping screw.

5b

Screw the side door profile firmly to the door roller profile.

5c

Use a 4.2x22 mm self-tapping screw.

5d

Screw the side door profile firmly to the lower floor profile using the 4.2 x 22 mm self-tapping screw.

Inserting the door seal

The door seal is inserted into the outward-facing door entrance profiles so that it points towards the greenhouse. This covers the gap between the door leaf and the door entrance profile.

Detail: Door seal

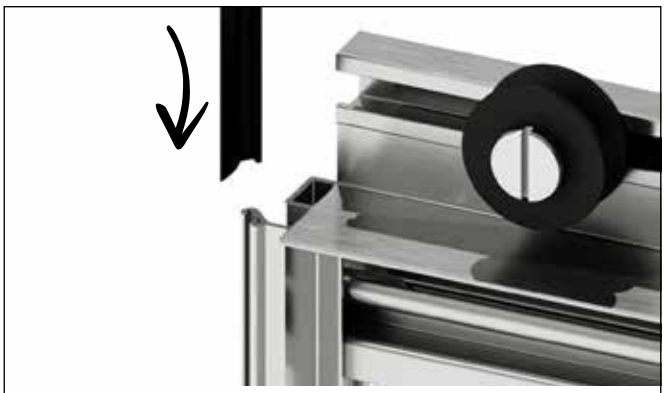

Cut the door seal to the length of the side door profile and insert it into the groove provided.

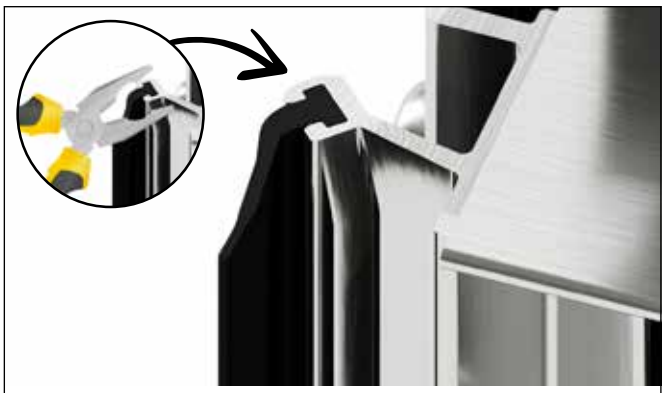

Crimp the profile at the top with pliers to prevent the door seal from slipping!

1a

Pick up the door track.
Caution: Before sliding them into the cross brace from the side, use a little oil (not included) to prevent the profiles from jamming!

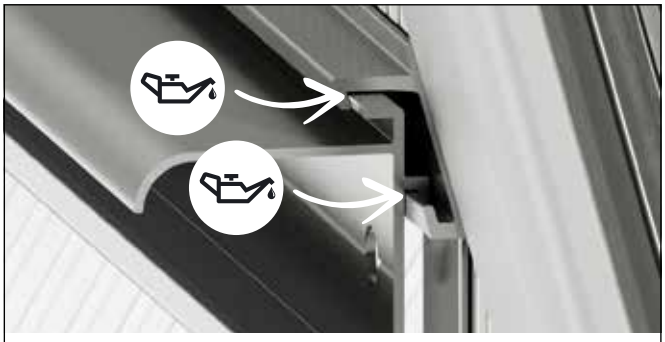

Insert the door track into the cross profile according to the cross-section shown. Please use a little oil at the marked points to make insertion easier!

1b

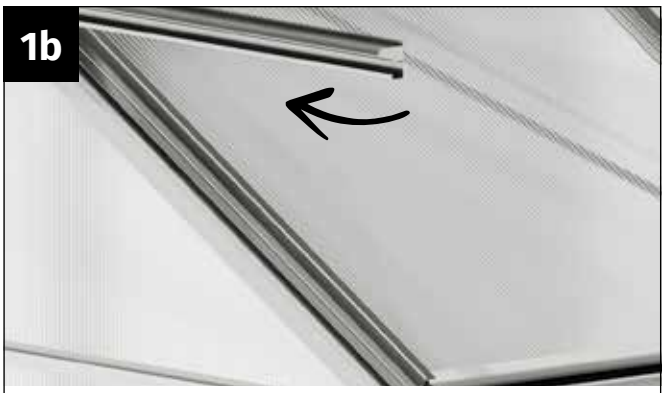

Insert the door track so that the outside is flush with the outside of the rain gutter.

2a

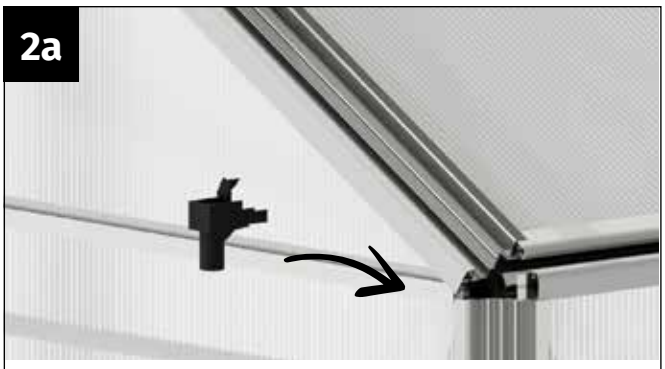

Pick up a right rain drain. Attach the rainwater outlet to the gutter and push it into the gutter as far as it will go.

2b

Pick up the support for the door track.

2c

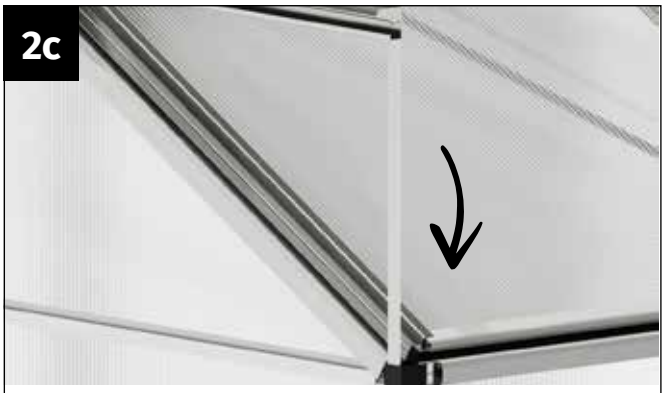

Insert the door support into the rain drain holder provided.

2d

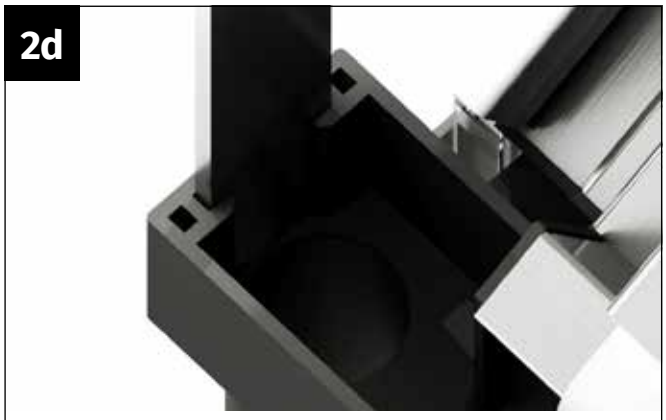

Detail: Door support at the bottom of the rain drain

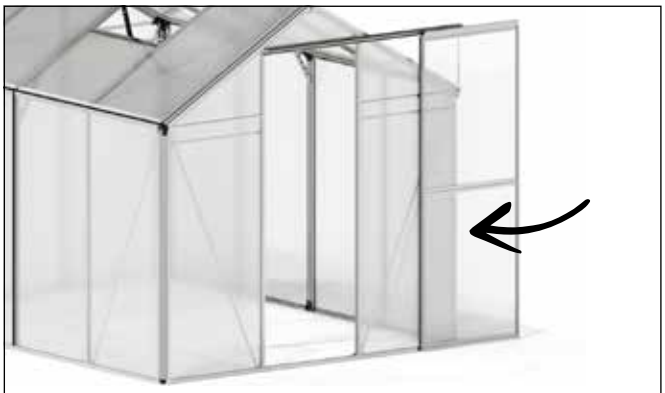

Pick up the prepared door leaf and insert it into the front wall.

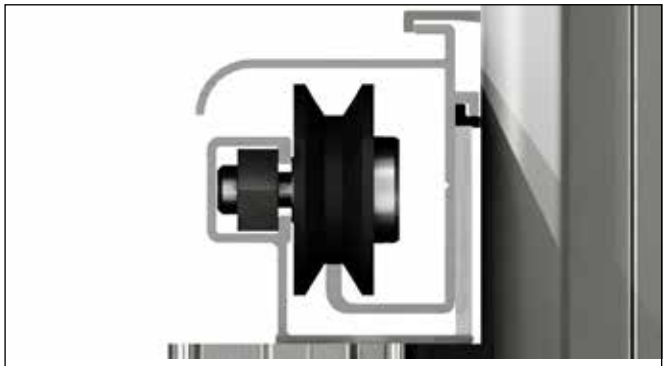

Insert the door leaves into the greenhouse from the right. Ensure that the door rollers are hooked into the door track at the top in accordance with the cross-section shown.

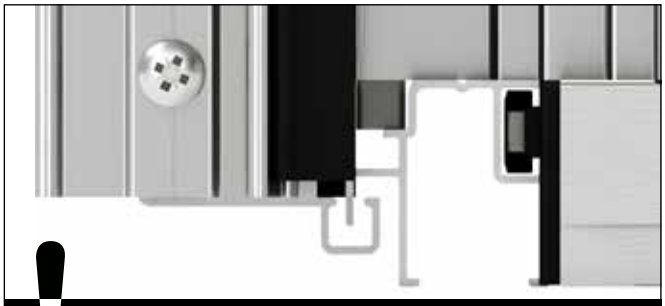

! Also ensure that the bottom of the door leaf is hooked into the lug provided on the floor profile. This prevents the door leaf from tipping away from the greenhouse at the bottom.

2e

Take a door rail guard, an M6x12 mm bolt and an M6 nut.

2f

Attach the door rail protection to the door rail profile.

2g

Insert the M6x12 mm screw from behind through the hole in the door track and the door track guard.

2h

Screw the door rail guard and the door track firmly together using an M6 nut.

2i

Take a door rail guard, an M6x12 mm bolt and an M6 nut.

2j

Attach the door rail protection to the door track.

2k

Insert the M6x12 mm screw from behind through the hole in the support, the door track and the door track guard.

2l

Screw the door rail guard, the door track and the support firmly together using an M6 nut. **Make sure that the support is aligned perpendicularly. Otherwise, align the door labels accordingly!**

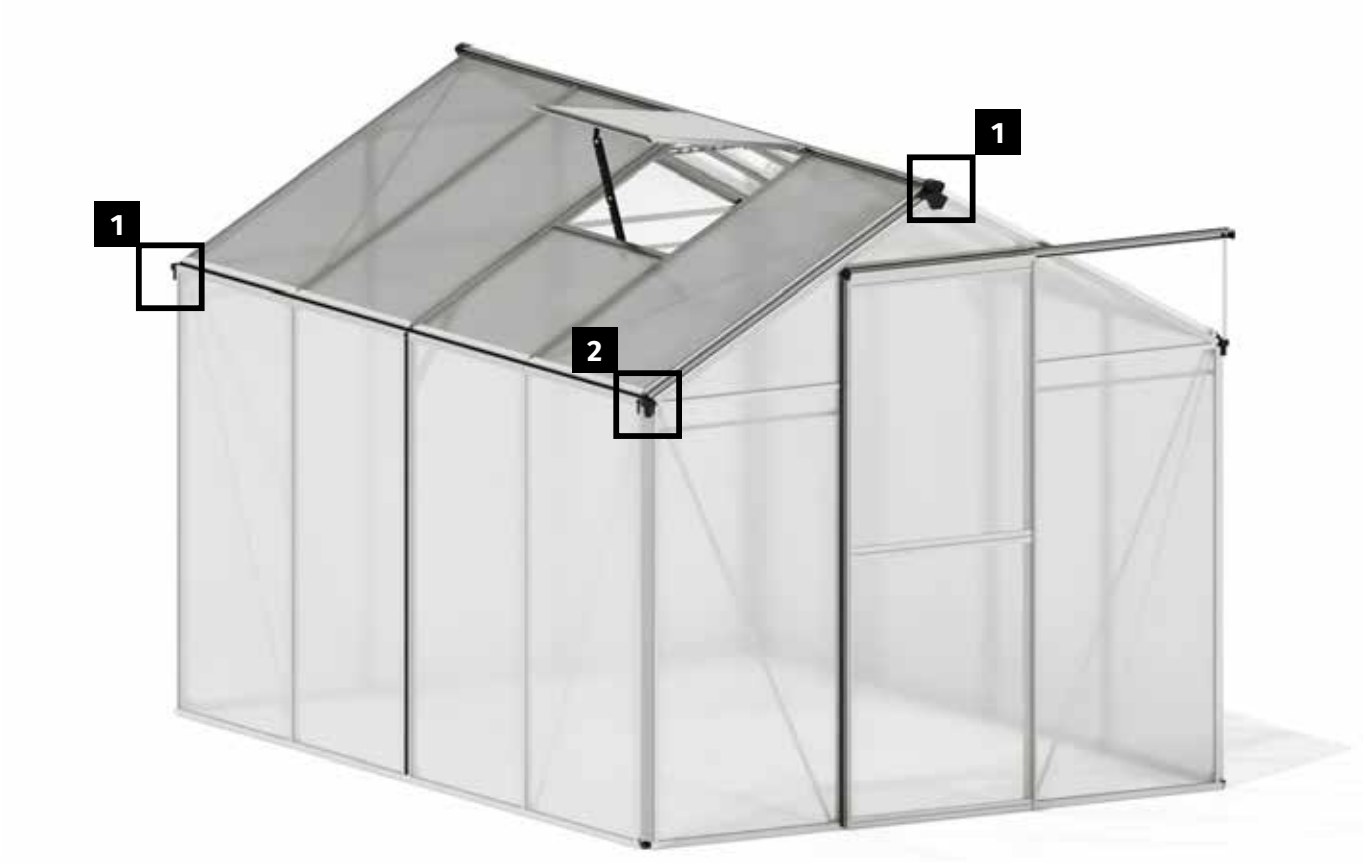

You will need the following for this assembly step:

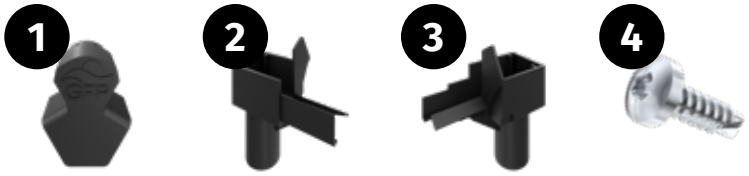

Part	Item number	Designation	Length	Jasmin 2	Jasmin 3	Jasmin 4	Jasmin 5
1	NG204	Ridge cover	-	**2**	**2**	**2**	**2**
2	NG202L	Rain drain - left	-	**1**	**1**	**1**	**1**
3	NG202R	Rain drain - right	-	**1**	**1**	**1**	**1**
4	BS 3.9x13	Self-tapping screws 3.9 x 13	-	**4**	**4**	**4**	**4**

Important note

Please do not forget to check and retighten all screw connections once assembly is complete!

Please repeat this process after about two weeks!

Take one ridge cover for the front and one for the rear of the greenhouse.

Attach the ridge cover to the ridge profile.

Screw the ridge cover to the ridge profile using two 3.9x13 mm screws. **We recommend pre-drilling!**

Use the remaining rainwater outlets on the left and right for the open ends of the gutters.

Insert the rain drain into the gutter as far as it will go on the left and right.

Well done, congratulations!

We wish you much joy with your
New plant paradise!

distributed by
GFP Handels GesmbH
Passauerstrasse 24
A-4070 Eferding

www.gfp-international.com

Toolport GmbH
Gutenbergring 1-5
D-22848 Hamburg

www.toolport.de

JAS206 / JAS306 / JAS406 / JAS506